2017 Revolution

contacts

bripac is open to give its full cooperation to customers and ensures its full availability to solve any technical or commercial question. **bripac** gives the utmost care to guaranteed delivery

bripac group

headquarter:

bripac srl

centro artigianale • p.le del lavoro, 205
21044 Cavaria (Va) • Italy

phone +39-0331-212333
+39-0331-216100
fax +39-0331-219282
web www.bripac.it
e-mail info@bripac.it

contacts

Direction	tibriata@bripac.it
Direction	mbriata@bripac.it
Commercial	scolombo@bripac.it
Commercial	falaimo@bripac.it
Administration	bmazzucchelli@bripac.it
Administration	mbellucco@bripac.it
Technical	agallon@bripac.it
Information	info@bripac.it

branches: **bripac india** | **bripac p.r.china** | **bripac u.s.a.**

Pls find here below a link,
from which you'll be able to download our New 2017 Catalogue
http://www.bripac.it/Catalogue2017.pdf

welcome

Professionalism - Reliability - Committment

Quality · Safety · Research · Planning · Service · Price
ISO 9001 · ISO 11117:2008 · TC/DOT:2007

Accessories for compressed gas cylinders,
LPG cylinders, tanks and fire extinguishers.

Steel & Nylon Caps · Steel & ABS & Nylon Guards
Neck Rings · Flanges · Shrouds · Foot rings

New branches
forged & machined parts:
aluminium · brass · copper

pad printing machines

Standards
EN ISO 11117:2008
TC/DOT:2007

Passion means energy
and without passion and energy,
there is nothing at all.

On our side, we're always willing
to look into the future,
in order to find innovative solutions,
thus providing the highest quality
and safety of all our products.

Let's rock the 2017 bripac
Revolution.

news 2017

ABS for cylinders up to **50 kg**

CAPS

patented by **bripac**

NYLON for cylinders up to **100 kg**

bripac®

dwg.BB.08

Standards ISO 11117:2008 TC/DOT:2007
for cylinders up to 50 kg.

Made in Italy

dwg.BB.09

Standards ISO 11117:2008 TC/DOT:2007
for cylinders up to 100 kg.

EU type

US type

- ✓ light 350 grams ✓
- ✓ easy assembly
- ✓ W80x11T.P.I.
- ✓ 3"1/8x11U.N.
- ✓ pad printing logo
- ✓ different RAL colours
- ✓ no rust
- ✓ cost reduction
- ✓ anti-theft products
- ✓ ISO 11117:2008 ✓
- ✓ TC/DOT:2007 ✓

news 2017

LPG ABS & NYLON GUARD

patented by **bripac**

dwg.BB.20

Standards ISO 11117:2008 TC/DOT:2007
for cylinders up to 50 kg.

Made in Italy

CREATING INNOVATIVE EUROPEAN SOLUTIONS

SOLUTION
120 grams

OPPORTUNITY IDENTIFICATION

EUROPEAN NEED

The opportunity to standardize the old guards in steel too heavy-800 grams with new material, Nylon

PROCESS ANALYSIS

PRODUCTIVITY

800 grams steel

TEST DESIGN

STANDARDS

LPG Guard
- *NYLON weight 120 grams*
- *ISO 11117:2008*
  cylinder up to 50 kg
  vertical drop test
  inclined drop test at 30°
  axial test 288 kg (4 times)
  axial test handle 100 kg

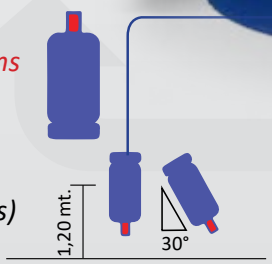

INNOVATIVE SOLUTION DESIGN

COLLABORATION

LIGHT	*Range of temperature* ***-40° +80°***
Easy *assembly*	***Anti-theft*** *products*
Different RAL ***Colours***	*Filling Station* ***Productivity*** *Improvement*
Pad printing ***Flame, LOGO*** *and/or* ***Instruction*** *for use*	*Traditional LPG cylinder guard* ***Cost Reduction***
Thread *66x2,5S.I. or 68x3S.I.*	***European*** *Price Agreement*
European Standardized Design	***No rust***

news 2017

ABS GUARD

patented by **bripac**

dwg.BB.01

Standards ISO 11117:2008 TC/DOT:2007
for cylinders up to 30, 50 kg.

Made in Italy

CREATING INNOVATIVE EUROPEAN SOLUTIONS

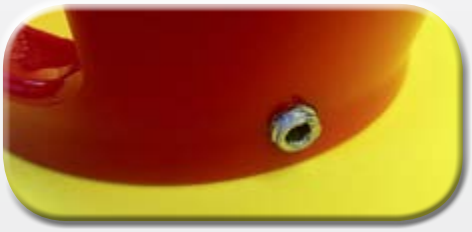

ABS guard with screw

- ✓ assembled at cold or warm
- ✓ W80x11T.P.I. or 3"1/8x11U.N.
- ✓ different RAL colours
- ✓ weight 230 grams
- ✓ pad printing on 1 or 2 sides
- ✓ ISO11117/TC-DOT up to 30, 50 kg.

news 2017

LPG ABS & NYLON GUARD

patented by bripac

dwg.BB.29

Standards ISO 11117:2008 TC/DOT:2007
for cylinders up to 50 kg.

Made in Italy

CREATING INNOVATIVE EUROPEAN SOLUTIONS

SOLUTION
300 grams

OPPORTUNITY IDENTIFICATION

EUROPEAN NEED

The opportunity to standardize the old guards in steel too heavy-1.400 grams with new material, Nylon

PROCESS ANALYSIS

PRODUCTIVITY

1.400 grams steel

TEST DESIGN

STANDARDS

LPG Guard
- *NYLON weight 300 grams*
- *ISO 11117:2008*
  cylinder up to 50 kg
  vertical drop test
  inclined drop test at 30°
  axial test 288 kg (4 times)
  axial test handle 100 kg

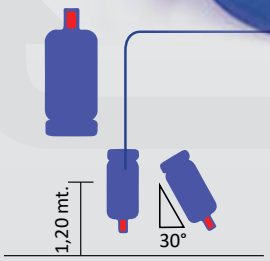

INNOVATIVE SOLUTION DESIGN

COLLABORATION

LIGHT			*Range of temperature* ***-40° +80°***
Easy *assembly*			***Anti-theft*** *products*
Different RAL ***Colours***			*Filling Station* ***Productivity*** *Improvement*
Pad printing ***Flame, LOGO*** *and/or* ***Instruction*** *for use*			*Traditional LPG cylinder guard* ***Cost Reduction***
Thread *66x2,5S.I. or 68x3S.I.*			***European*** *Price Agreement*
European Standardized Design			***No rust***

news 2017

ABS & NYLON CAPS
for cylinders up to

100 kg.

100 kg.

ABS & NYLON GUARDS
for cylinders up to

100 kg.

100 kg.

60 kg.

ABS & NYLON GUARDS
for LPG cylinders up to

72 kg.

72 kg.

STEEL GUARDS
for cylinders up to

140 kg.

products

STEEL CAPS EU TYPE

Our Caps are **patented** by bripac and certified according to **ISO 11117:2008** and **TC/DOT:2007.**

The standards are engraved on the hexagon. They can be engraved with marking, logo, etc.

They are supplied:
- raw
- zinc plated, inside and outside
- powder painted
- zinc & powder painted

STEEL CAPS US TYPE

Our Caps are **patented** by bripac and certified according to **ISO 11117:2008** and **TC/DOT:2007.**

The standards are engraved on the outside dia. They can be engraved with marking, logo, etc.

They are supplied:
- raw
- zinc plated outside
- primer
- powder painted
- primer & powder painted

STEEL GUARDS

Our Guards are **patented** by bripac and certified according to **ISO 11117:2008** and **TC/DOT:2007.**

The standards are engraved on the body. They can be engraved with marking, logo, etc.

They are supplied:
- raw
- zinc plated
- powder painted
- zinc & powder painted

TOP STEEL & CAST IRON GUARDS

Our Guards are **patented** by bripac and certified according to **ISO 11117:2008** and **TC/DOT:2007.**

The standards are engraved on the body. They can be engraved with marking, logo, etc.

They are supplied:
- raw
- zinc plated
- powder painted
- zinc & powder painted

products

ABS & NYLON GUARDS

ABS & NYLON GUARDS for compressed gas cylinders

Our Guards are **patented** by bripac and certified according to **ISO 11117:2008** and **TC/DOT:2007.**

The standards are embossed on the body.
- for cylinders up to 30 kg.
- for cylinedrs up to 50 kg.

ABS & NYLON GUARDS FOR LPG

ABS & NYLON GUARDS for LPG gas cylinders

Our Guards are **patented** by bripac and certified according to **ISO 11117:2008** and **TC/DOT:2007.**

The standards are embossed on the body.
- for cylinders up to 50 kg.

NECK RINGS-FLANGES-SPUDS

Are manufactured according to the drawing and/or sample of various customers, following their requirements.

There are mainly two types:
- hot forged from steel billet
- cold forged from steel plate

In both cases, high technology plants material to be transformed, without altering its mechanical features.

The subsequent machinings are carried out by means of a long tested production line, thus ensuring the customers that their requirements are fully met.

Both types of neck rings can be marked embossed and/or engraved. The neck rings can be supplied raw or zinc plated.

products

LPG ACCESSORIES: FOOT RINGS & SHROUDS

LPG Guards are **patented** by bripac and certified according to **ISO 11117:2008** and **TC/DOT:2007.**

The standards are engraved and/or embossed on the body. They can be engraved and/or embossed and/or pad printed, with marking, logo, etc. The materials used are ABS, Nylon, steel and cast iron.

They are supplied:
- raw zinc plated powder painted
- primer & powder painted
- pad printed

Foot Rings & Shrouds are manufactured top the drawing and/or sample of various customers, following their requirements.

The materials used are ABS, Nylon and steel.

LPG ACCESSORIES: NECK RINGS & GUARDS

LPG Guards are **patented** by bripac and certified according to **ISO 11117:2008** and **TC/DOT:2007.**

The standards are engraved and/or embossed on the body.
They can be engraved and/or embossed and/or pad printed, with marking, logo, etc. The materials used are ABS, Nylon, steel and cast iron.

They are supplied:
- raw zinc plated powder painted
- primer & powder painted
- pad printed

LPG Neck rings & Guards, are manufactured according to the drawing and/or sample of various customers, following their requirements. They are hot forged from steel billet.

High technology plants enable the raw material to be transformed, without altering its mechanical features.

The subsequent machinings are carried out by means of a long tested production line, thus ensuring the customers that their requirements are fully met.

packaging & punctuality

Parts are usually packed into strong cartons or into wooden cases,
placed on europallets and then sealed by a thermoretractable film.
Pieces are placed on different layers, each one separated by a cardboard.

On the case side, we put a label showing:

customer's name • invoice no. and date • quantity • weight

type of products and customer's dwg

check control on percentage • any further shipping marking, on request

We give the top importance to trasport, since it takes care of:

safety

standardized numerical control package,
thanks to the method by layers

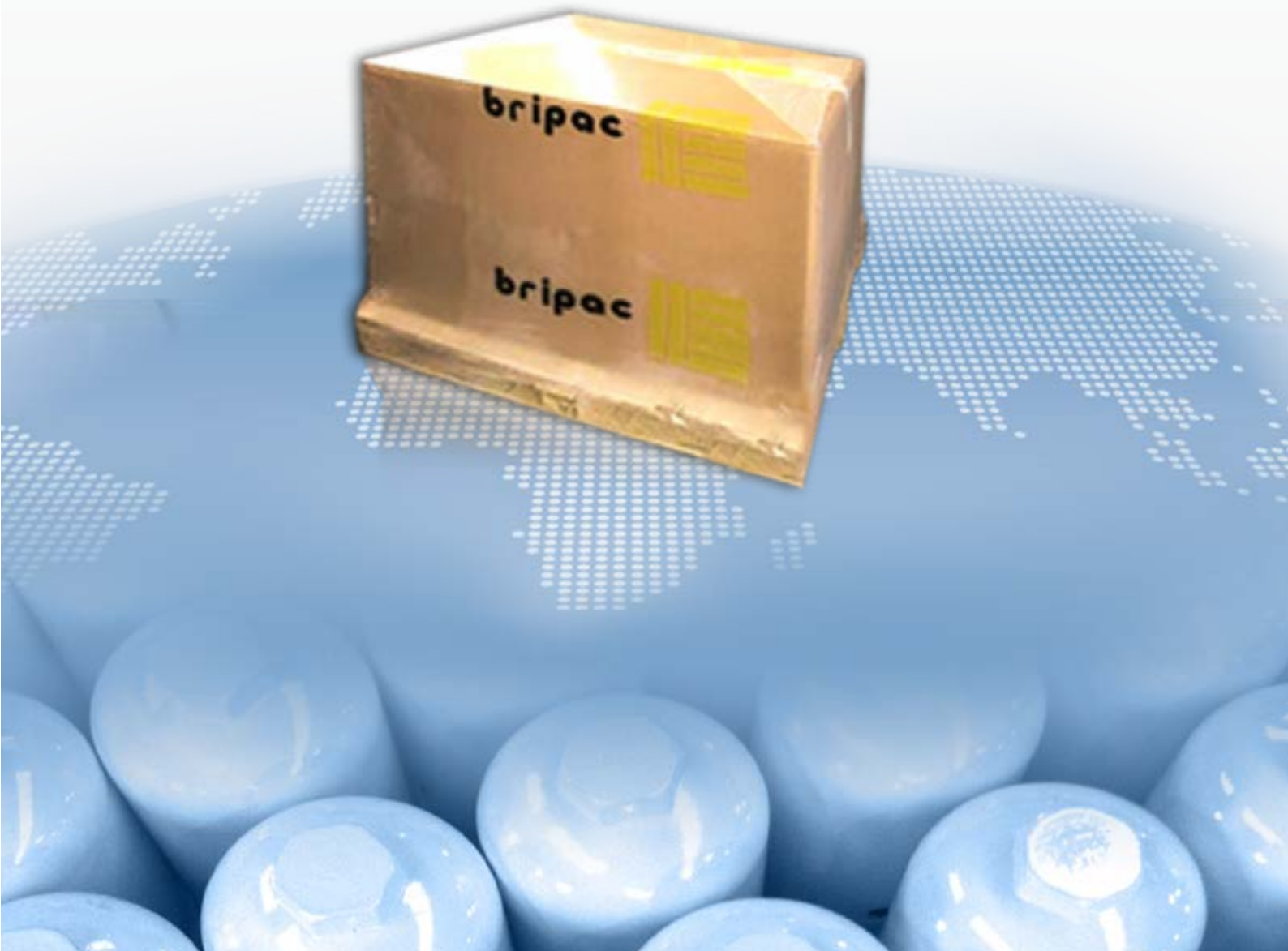

standards

Drop Test ISO 11117:2008

- The protection device shall be tested to prove that under rough handling conditions, the test valve maintains its operability
- This test shall be carried out with cap or guard at room temperature +20° C and at-20° or a lower temperature if specified (6.7.1)
- The protection device together with the valve for which it is intended shall be fitted to a test cylinder
- This assembly shall be dropped vertically at an angle of 30°, the cap or guard directed downwards.
  There shall be a distance of 1,20 mt between the lowest point of the guard or cap and the impact surface (6.7.5)

Drop Test TC/DOT:2007

- Each cylinder with a valve must be equipped with a protective metal cap, other valve protection device or an overpack which is sufficient to protect the valve from breakage or leakage resulting from a drop of 2.0 mt./7 feet onto a non-yelding surface, such as concrete or steel
- Impact must be at an orientation most likely to cause damage, as specified in 173.4

Transportable Gas Cylinders Valve protection Caps and Guards for the industrial and medical gas cylinders drawings, construction and tests

Steel Cap
dwg.1.01

Standards ISO 11117:2008
for cylinders up to 140 kg.

engraving
- **bripac**
- **ISO PA**
- **140 kg.**
- **yy.zz**

engraving
- **LOGO**

no.2 holes
a) › dia.10 mm.
b) › dia.20 mm.

thread
- **W80x11T.P.I.**

engraving
- BRIPAC
- ISO PA
- 140 Kg
- yy.zz

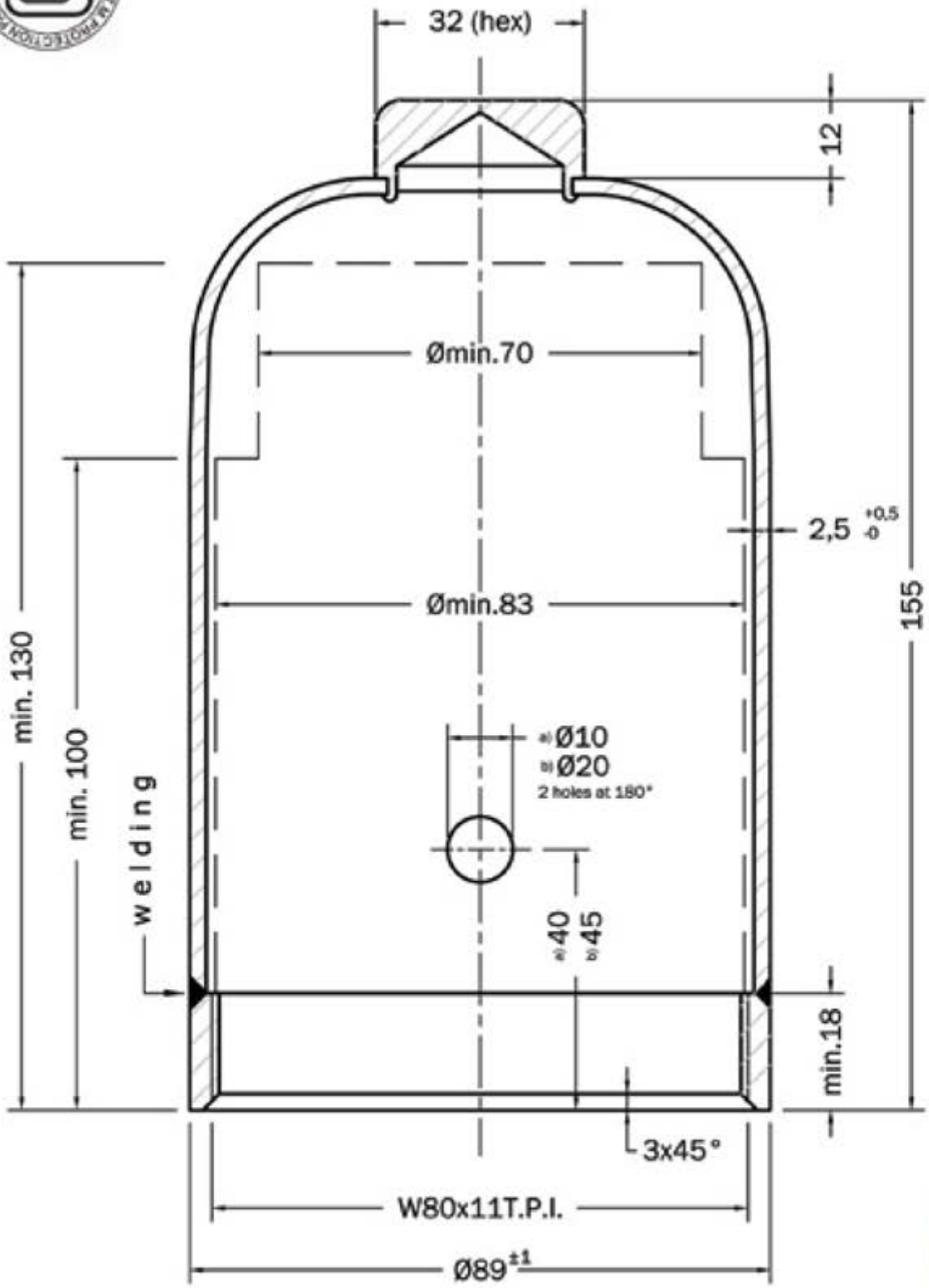

REV.	CAP EN ISO 11117	MATERIAL	STEEL

CUSTOMER	CUST.DWG.	MATERIAL		
LIMITS OF ACCURANCY			CHECKED	T. B.
UNLESS OTHERWISE SPECIFIED:			DRAWN	S. B.
			DATE	17-10-2012
TOLERANCES: decimals ± 2mm angles ± 5°			SCALE	1:1
			dwg.no.	1.01

Cavaria (VA) Italy • www.bripac.it • info@bripac.it

Information and data set farth here are disclosed in confidence and are proprietary and property of bripac srl and shall not, without its prior written permission, be used, duplicated or disclosed in whole or in part for any purpose other than authorized official business of bripac srl.

Steel Cap
dwg.I.02

Standards ISO 11117:2008
for cylinders up to 140 kg.

engraving
- **bripac**
- **ISO PA**
- **140 kg.**
- **yy.zz**

engraving
- **LOGO**

no.2 holes
a) › dia.10 mm.
b) › dia.20 mm.

tapering

thread
- **W80x11T.P.I.**
- **3” 1/8x11U.N.**

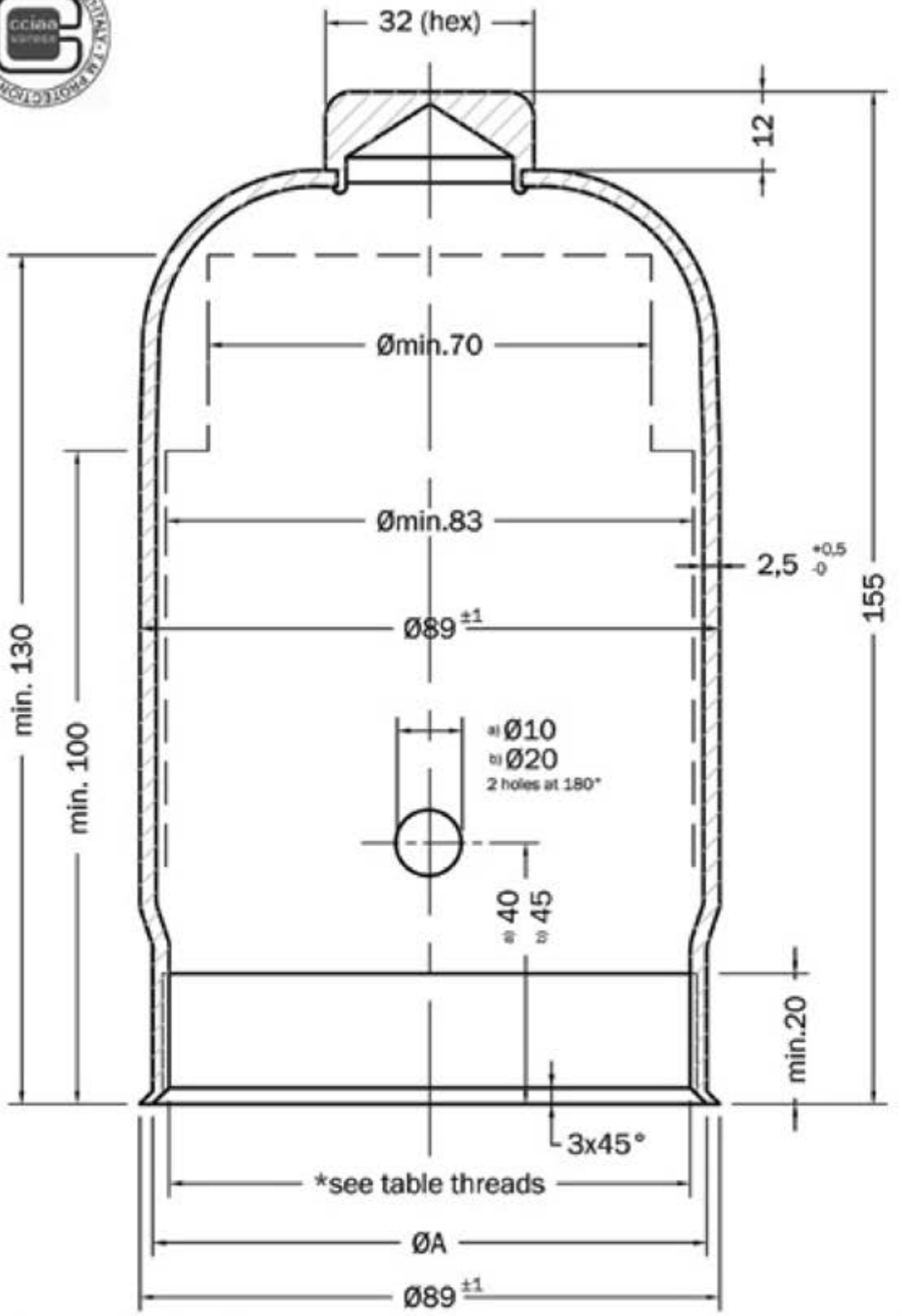

engraving
- BRIPAC
- ISO PA
- 140 Kg
- yy.zz

pos.	table threads	ØA
1.	W80x11T.P.I.	85
2.	3"1/8x11U.N.	85
...	on request	...

REV.	CAP EN ISO 11117	MATERIAL	STEEL

CUSTOMER	CUST.DWG.	MATERIAL	CHECKED: T. B.
LIMITS OF ACCURANCY	bripac		DRAWN: S. B.
UNLESS OTHERWISE SPECIFIED:			DATE: 17-10-2012
TOLERANCES: decimals ± 2mm angles ± 5°	Cavaria (VA) Italy • www.bripac.it • info@bripac.it		SCALE: 1:1
			dwg.no. **1.02**

Information and data set farth here are disclosed in confidence and are proprietary and property of bripac srl and shall not, without its prior written permission, be used, duplicated or disclosed in whole or in part for any purpose other than authorized official business of bripac srl.

Steel Cap
dwg.I.04

Standards ISO 11117:2008
for cylinders up to 140 kg.

engraving
- **bripac**
- **ISO PA**
- **140 kg.**
- **yy.zz**

engraving
- **LOGO**

no.2 holes
a) › dia.10 mm.
b) › dia.20 mm.

thread
- **W80x11T.P.I.**
- **3” 1/8x11U.N.**

engraving
- BRIPAC
- ISO PA
- 140 Kg
- yy.zz

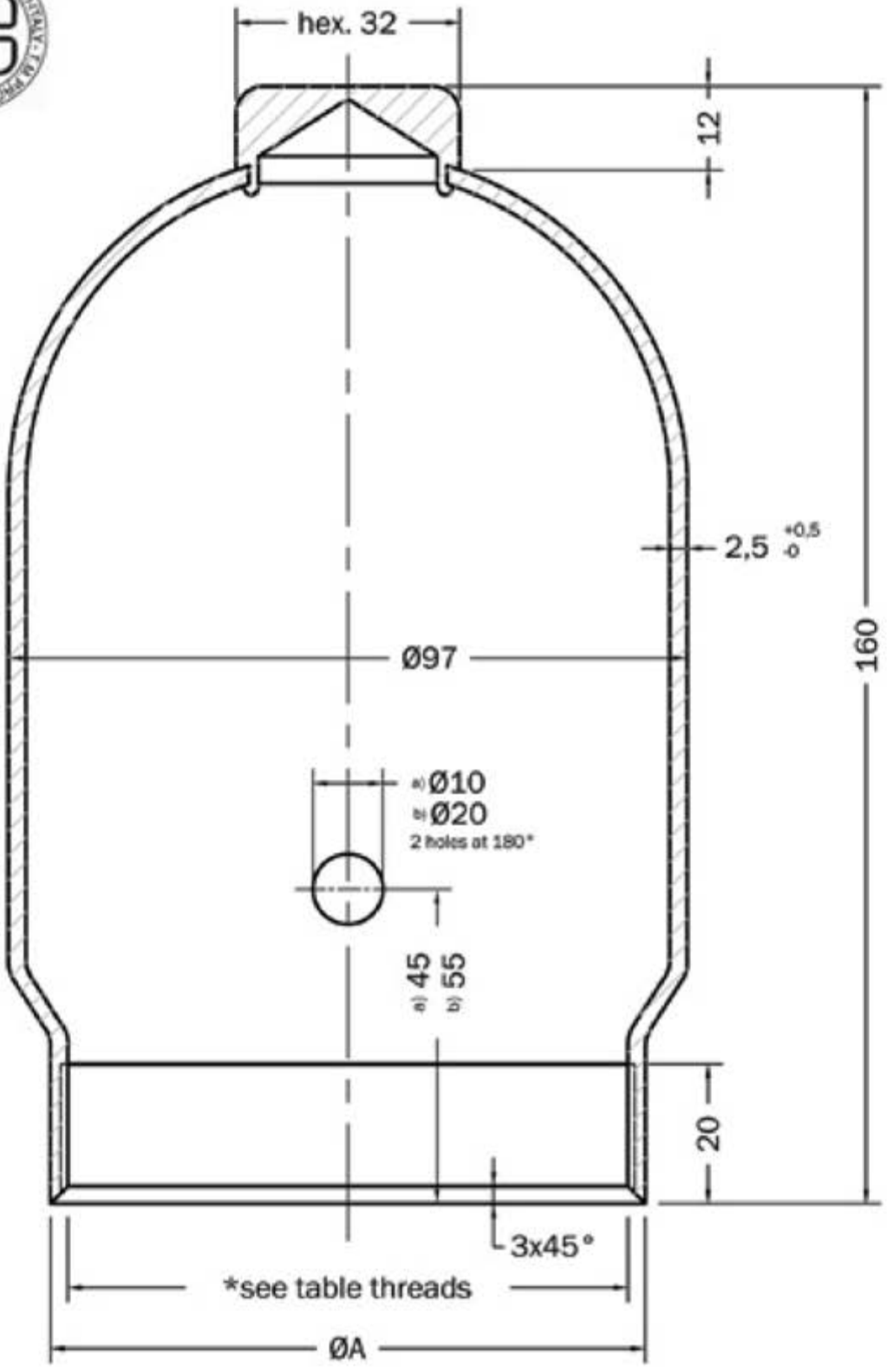

pos.	table threads	ØA
1.	W80x11T.P.I.	85
2.	3"1/8x11U.N.	85
...	on request	...

REV.	CAP EN ISO 11117	MATERIAL	STEEL
CUSTOMER	CUST.DWG.	MATERIAL	CHECKED: T. B.
LIMITS OF ACCURANCY			DRAWN: S. B.
UNLESS OTHERWISE SPECIFIED: TOLERANCES: decimals ± 2mm angles ± 5°	bripac		DATE: 17-10-2012
	Cavaria (VA) Italy • www.bripac.it • info@bripac.it		SCALE: 1:1
	Information and data set farth here are disclosed in confidence and are proprietary and property of bripac srl and shall not, without its prior written permission, be used, duplicated or disclosed in whole or in part for any purpose other than authorized official business of bripac srl.		dwg.no. 1.04

Steel Cap
dwg.I.06-a

Standards ISO 11117:2008
TC/DOT:2007
for cylinders up to 140 kg.

engraving “a”
- **bripac**
- **TC/DOT**
- **125 kg.**
- **yy.zz**

engraving “b”
- **bripac**
- **ISO PA**
- **140 kg.**
- **yy.zz**

engraving “c”
- **bripac**
- **ISO PA/ TCDOT**
- **140 kg.**
- **yy.zz**

engraving
- **LOGO**

thread
- **W80x11T.P.I.**
- **3” 1/8x11U.N.**
- **3” 1/2x11U.N.**

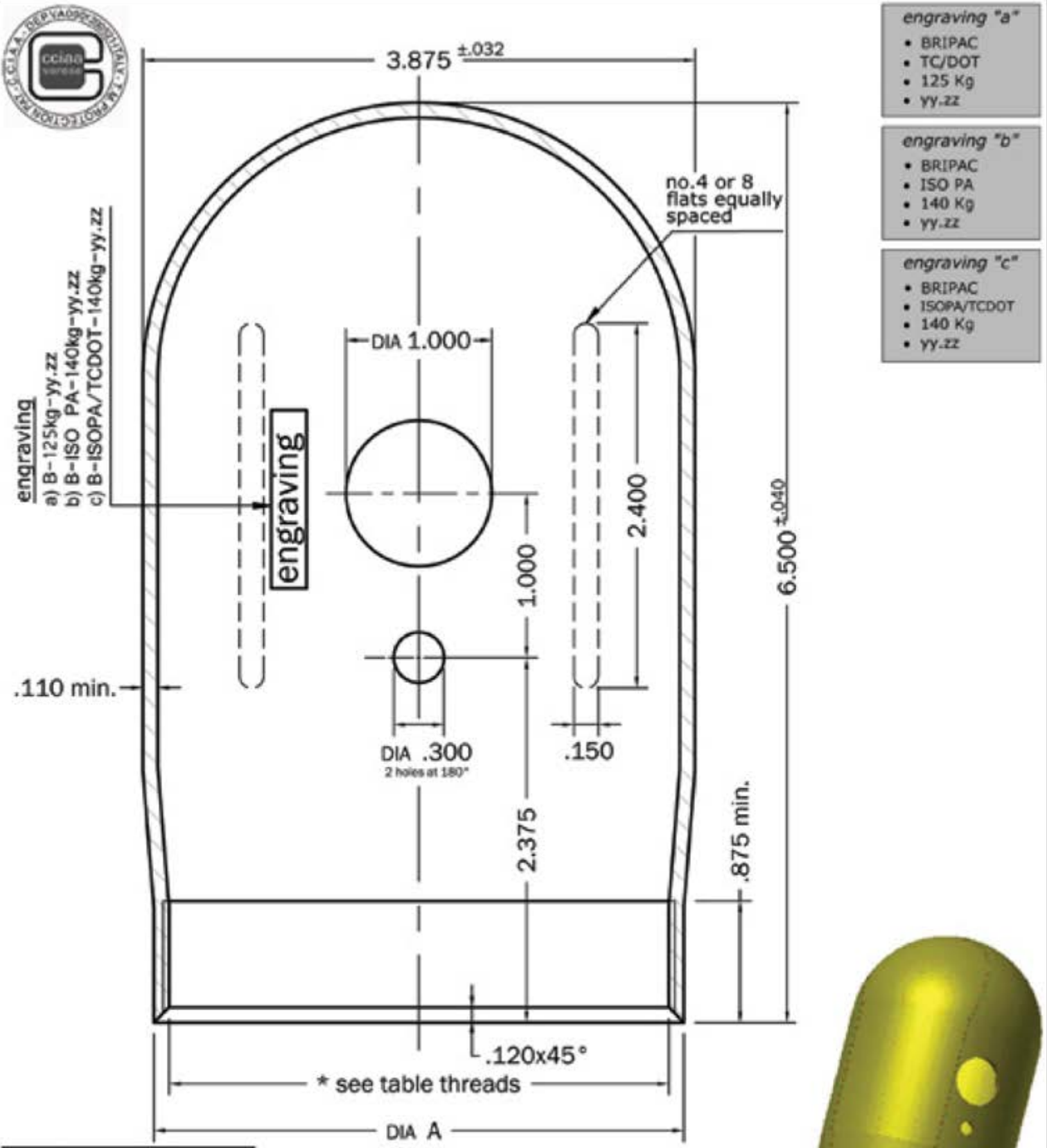

engraving "a"
- BRIPAC
- TC/DOT
- 125 Kg
- yy.zz

engraving "b"
- BRIPAC
- ISO PA
- 140 Kg
- yy.zz

engraving "c"
- BRIPAC
- ISOPA/TCDOT
- 140 Kg
- yy.zz

pos.	table threads	DIA A
1.	W80x11T.P.I.	3,370
2.	3"1/8x11 UN	3,370
3.	3"1/2x11 UN	3,750
...	on request	...

REV.	CAP TC/DOT-ISO 11117	MATERIAL	STEEL
CUSTOMER	CUST.DWG.	MATERIAL	CHECKED: T. B.
LIMITS OF ACCURANCY			DRAWN: S. B.
UNLESS OTHERWISE SPECIFIED: TOLERANCES: decimals ± .080 angles ± 5°	bripac		DATE: 17-10-2012
	Cavaria (VA) Italy • www.bripac.it • info@bripac.it		SCALE: 1:1
			dwg.no. 1.06-a

Information and data set farth here are disclosed in confidence and are proprietary and property of bripac srl and shall not, without its prior written permission, be used, duplicated or disclosed in whole or in part for any purpose other than authorized official business of bripac srl.

Steel Cap
dwg.I.06-b

Standards ISO 11117:2008
TC/DOT:2007
for cylinders up to 140 kg.

engraving “a”
- **bripac**
- **TC/DOT**
- **125 kg.**
- **yy.zz**

engraving “b”
- **bripac**
- **ISO PA**
- **140 kg.**
- **yy.zz**

engraving “c”
- **bripac**
- **ISO PA/ TCDOT**
- **140 kg.**
- **yy.zz**

engraving
- **LOGO**

thread
- **W80x11T.P.I.**
- **3” 1/8x11U.N.**

engraving "a"
- BRIPAC
- TC/DOT
- 125 Kg
- yy.zz

engraving "b"
- BRIPAC
- ISO PA
- 140 Kg
- yy.zz

engraving "c"
- BRIPAC
- ISOPA/TCDOT
- 140 Kg
- yy.zz

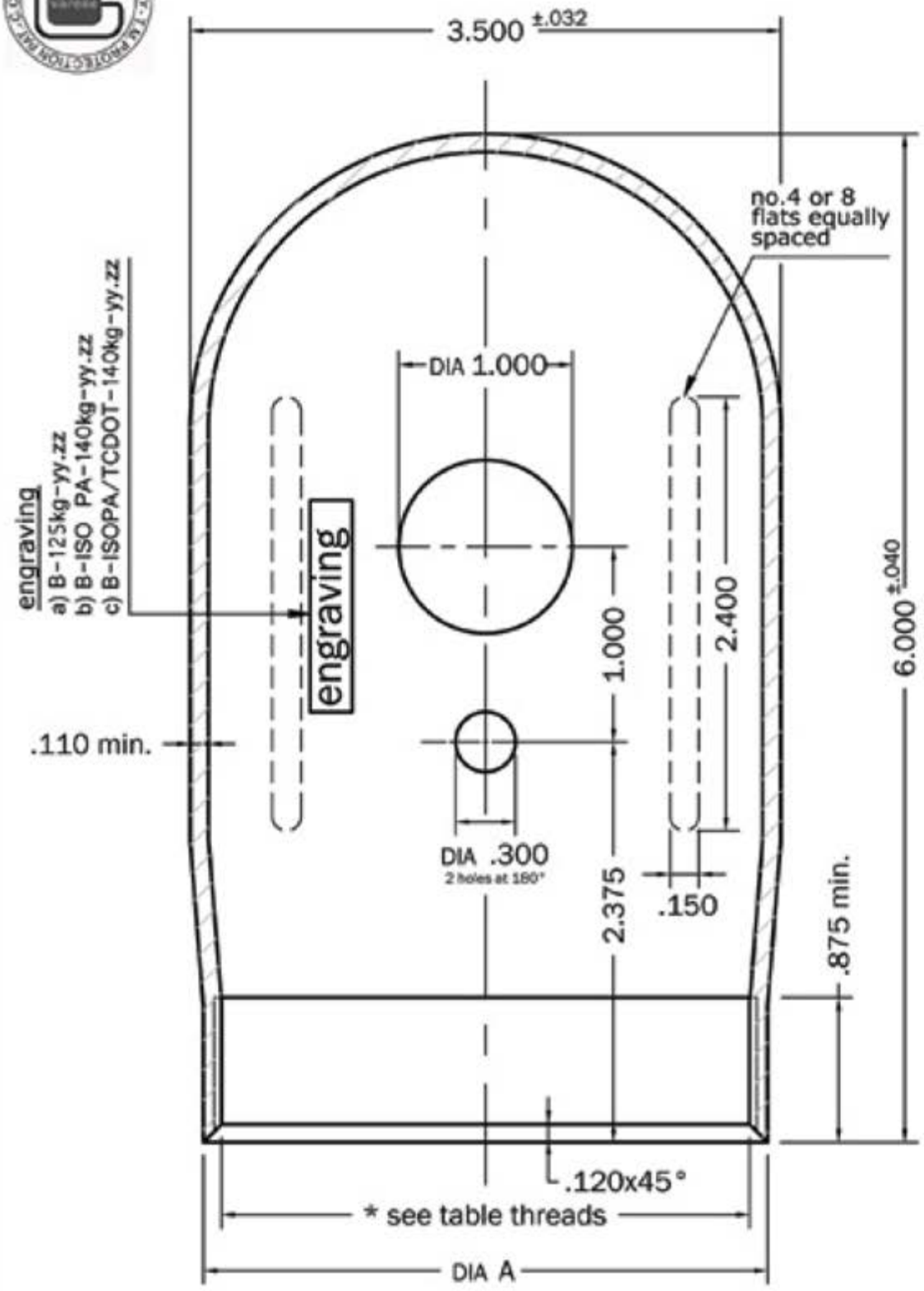

pos.	table threads	DIA A
1.	W80x11T.P.I.	3,370
2.	3"1/8x11 UN	3,370
...	on request	...

REV.	CAP TC/DOT-ISO 11117	MATERIAL	STEEL
CUSTOMER	CUST.DWG.	MATERIAL	CHECKED: T. B.
LIMITS OF ACCURANCY			DRAWN: S. B.
UNLESS OTHERWISE SPECIFIED: TOLERANCES: decimals ± .080 angles ± 5°	bripac		DATE: 17-10-2012
	Cavaria (VA) Italy • www.bripac.it • info@bripac.it		SCALE: 1:1
			dwg.no. 1.06-b

Information and data set farth here are disclosed in confidence and are proprietary and property of bripac srl and shall not, without its prior written permission, be used, duplicated or disclosed in whole or in part for any purpose other than authorized official business of bripac srl.

Steel Cap
dwg.1.07-a

Standards ISO 11117:2008
TC/DOT:2007
for cylinders up to 140 kg.

engraving “a”
- **bripac**
- **TC/DOT**
- **125 kg.**
- **yy.zz**

engraving “b”
- **bripac**
- **ISO PA**
- **140 kg.**
- **yy.zz**

engraving “c”
- **bripac**
- **ISO PA/ TCDOT**
- **140 kg.**
- **yy.zz**

thread
- **W80x11T.P.I.**
- **3” 1/8x11U.N.**
- **3” 1/2x11U.N.**

engraving
- **LOGO**

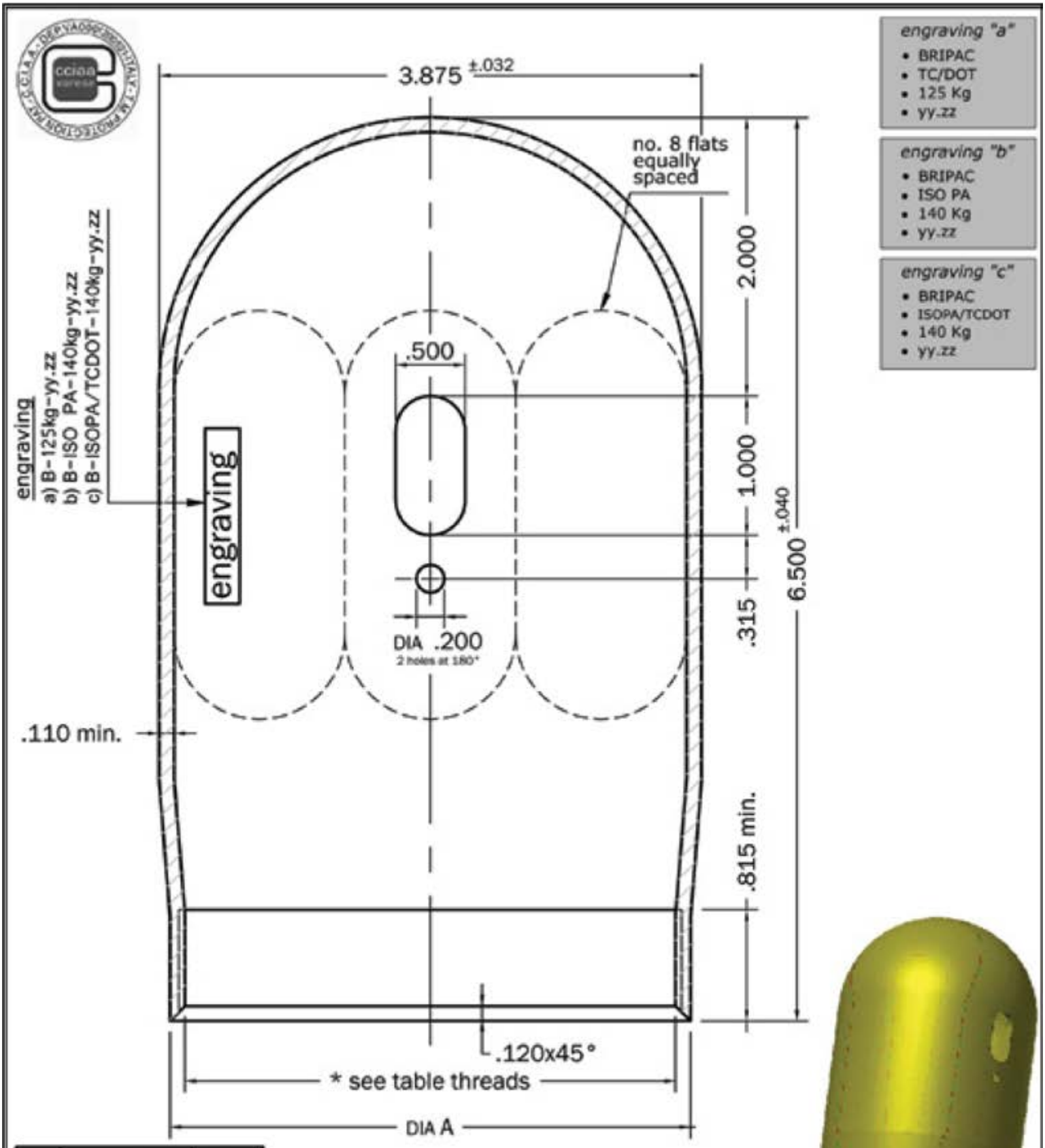

engraving "a"
- BRIPAC
- TC/DOT
- 125 Kg
- yy.zz

engraving "b"
- BRIPAC
- ISO PA
- 140 Kg
- yy.zz

engraving "c"
- BRIPAC
- ISOPA/TCDOT
- 140 Kg
- yy.zz

pos.	table threads	DIA A
1.	W80x11T.P.I.	3,370
2.	3"1/8x11 UN	3,370
3.	3"1/2x11 UN	3,750
...	on request	...

REV.	CAP TC/DOT-ISO 11117	MATERIAL	STEEL

CUSTOMER	CUST.DWG.	MATERIAL	CHECKED	T. B.
LIMITS OF ACCURANCY			DRAWN	S. B.
UNLESS OTHERWISE SPECIFIED:			DATE	17-10-2012
TOLERANCES: decimals ± .080 angles ± 5°			SCALE	1:1
			dwg.no.	1.07-a

bripac
Cavaria (VA) Italy • www.bripac.it • info@bripac.it

Information and data set farth here are disclosed in confidence and are proprietary and property of bripac srl and shall not, without its prior written permission, be used, duplicated or disclosed in whole or in part for any purpose other than authorized official business of bripac srl.

Steel Cap
dwg.1.07-b

Standards ISO 11117:2008
TC/DOT:2007
for cylinders up to 140 kg.

engraving “a”
- **bripac**
- **TC/DOT**
- **125 kg.**
- **yy.zz**

engraving “b”
- **bripac**
- **ISO PA**
- **140 kg.**
- **yy.zz**

engraving “c”
- **bripac**
- **ISO PA/ TCDOT**
- **140 kg.**
- **yy.zz**

engraving
- **LOGO**

thread
- **W80x11T.P.I.**
- **3” 1/8x11U.N.**

engraving "a"
- BRIPAC
- TC/DOT
- 125 Kg
- yy.zz

engraving "b"
- BRIPAC
- ISO PA
- 140 Kg
- yy.zz

engraving "c"
- BRIPAC
- ISOPA/TCDOT
- 140 Kg
- yy.zz

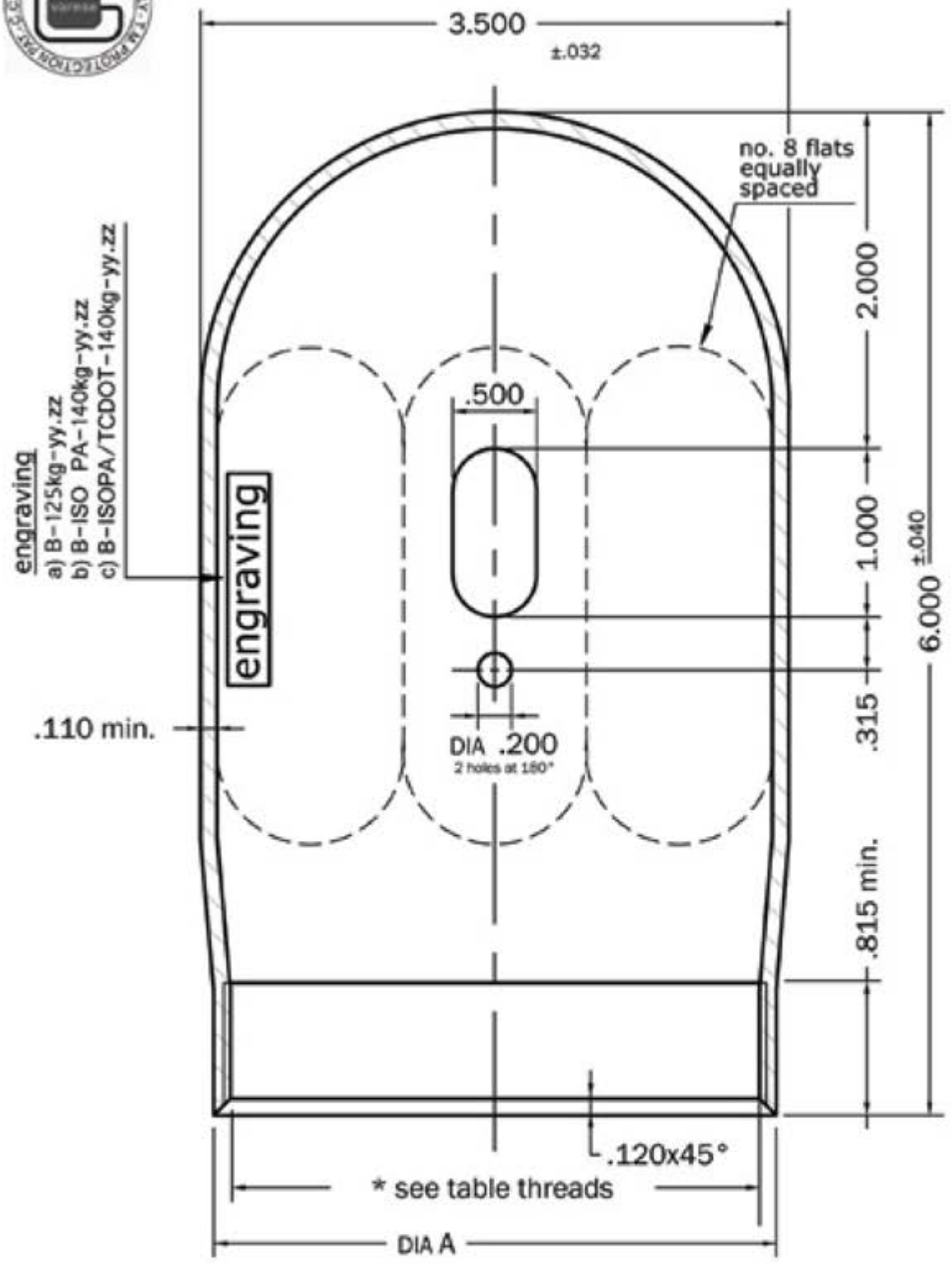

pos.	table threads	DIA A
1.	W80x11T.P.I.	3,370
2.	3"1/8x11 UN	3,370
...	on request	...

REV.	CAP TC/DOT-ISO 11117	MATERIAL	STEEL
CUSTOMER	CUST.DWG.	MATERIAL	CHECKED: T. B.
LIMITS OF ACCURANCY			DRAWN: S. B.
UNLESS OTHERWISE SPECIFIED: TOLERANCES: decimals ± .080 angles ± 5°	bripac		DATE: 17-10-2012
	Cavaria (VA) Italy • www.bripac.it • info@bripac.it		SCALE: 1:1
			dwg.no. 1.07-b

Information and data set farth here are disclosed in confidence and are proprietary and property of bripac srl and shall not, without its prior written permission, be used, duplicated or disclosed in whole or in part for any purpose other than authorized official business of bripac srl.

Steel Cap
dwg.I.08-a

Standards ISO 11117:2008
TC/DOT:2007
for cylinders up to 140 kg.

engraving “a”
- **bripac**
- **TC/DOT**
- **125 kg.**
- **yy.zz**

engraving “b”
- **bripac**
- **ISO PA**
- **140 kg.**
- **yy.zz**

engraving “c”
- **bripac**
- **ISO PA/ TCDOT**
- **140 kg.**
- **yy.zz**

engraving
- **LOGO**

thread
- **W80x11T.P.I.**
- **3” 1/8x11U.N.**

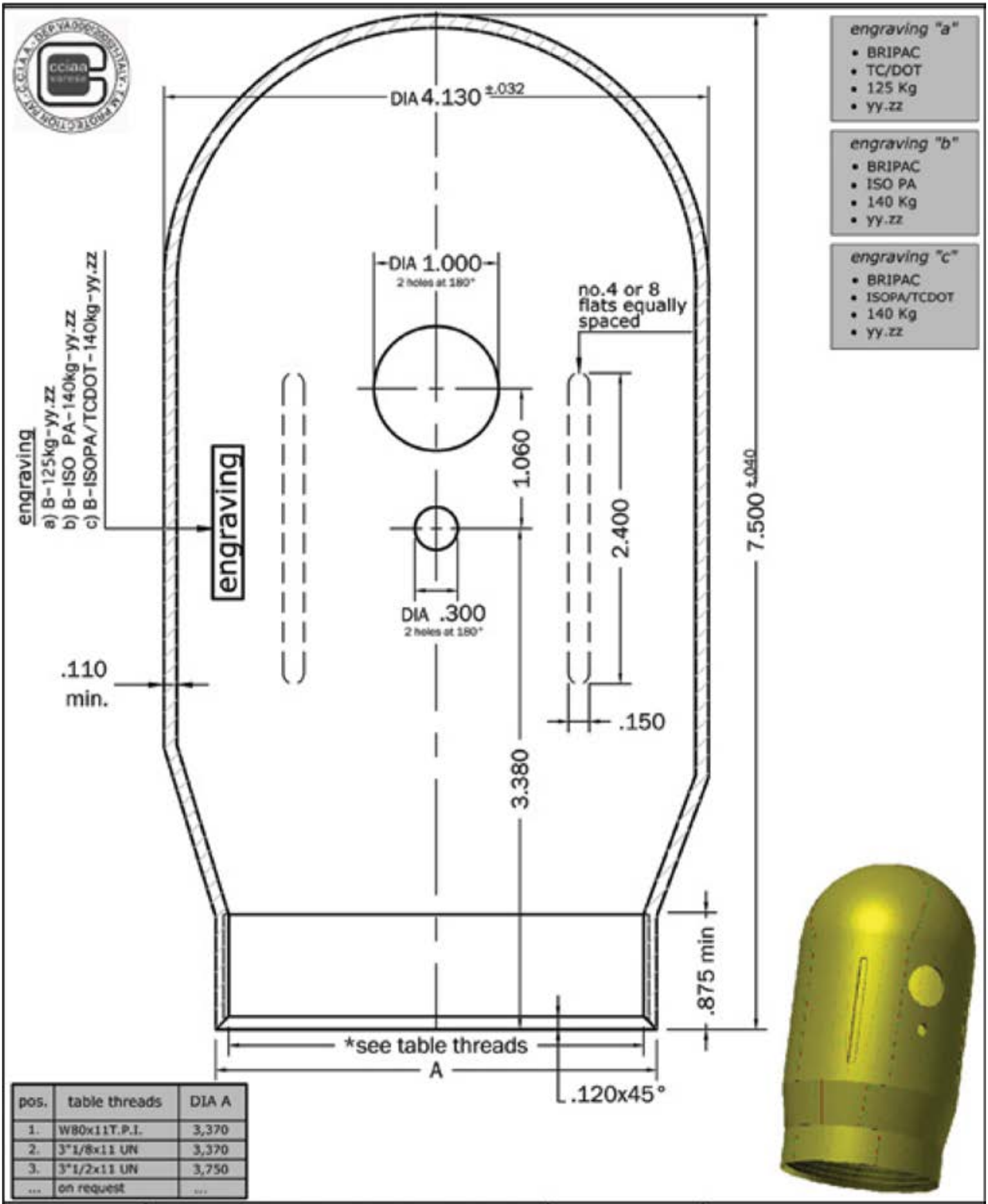

engraving "a"
- BRIPAC
- TC/DOT
- 125 Kg
- yy.zz

engraving "b"
- BRIPAC
- ISO PA
- 140 Kg
- yy.zz

engraving "c"
- BRIPAC
- ISOPA/TCDOT
- 140 Kg
- yy.zz

pos.	table threads	DIA A
1.	W80x11T.P.I.	3,370
2.	3"1/8x11 UN	3,370
3.	3"1/2x11 UN	3,750
...	on request	...

REV.	CAP TC/DOT-ISO 11117	MATERIAL	STEEL

CUSTOMER	CUST.DWG.	MATERIAL	CHECKED	T. B.
LIMITS OF ACCURANCY			DRAWN	S. B.
UNLESS OTHERWISE SPECIFIED:			DATE	17-10-2012
TOLERANCES: decimals ± .080 angles ± 5°			SCALE	1:1
			dwg.no.	1.08-a

bripac

Cavaria (VA) Italy • www.bripac.it • info@bripac.it

Information and data set farth here are disclosed in confidence and are proprietary and property of bripac srl and shall not, without its prior written permission, be used, duplicated or disclosed in whole or in part for any purpose other than authorized official business of bripac srl.

Steel Cap
dwg.1.09

Standards ISO 11117:2008
for cylinders up to 140 kg.

engraving
- **bripac**
- **ISO PA**
- **140 kg.**
- **yy.zz**

engraving
- **LOGO**

thread
- **W80x11T.P.I.**

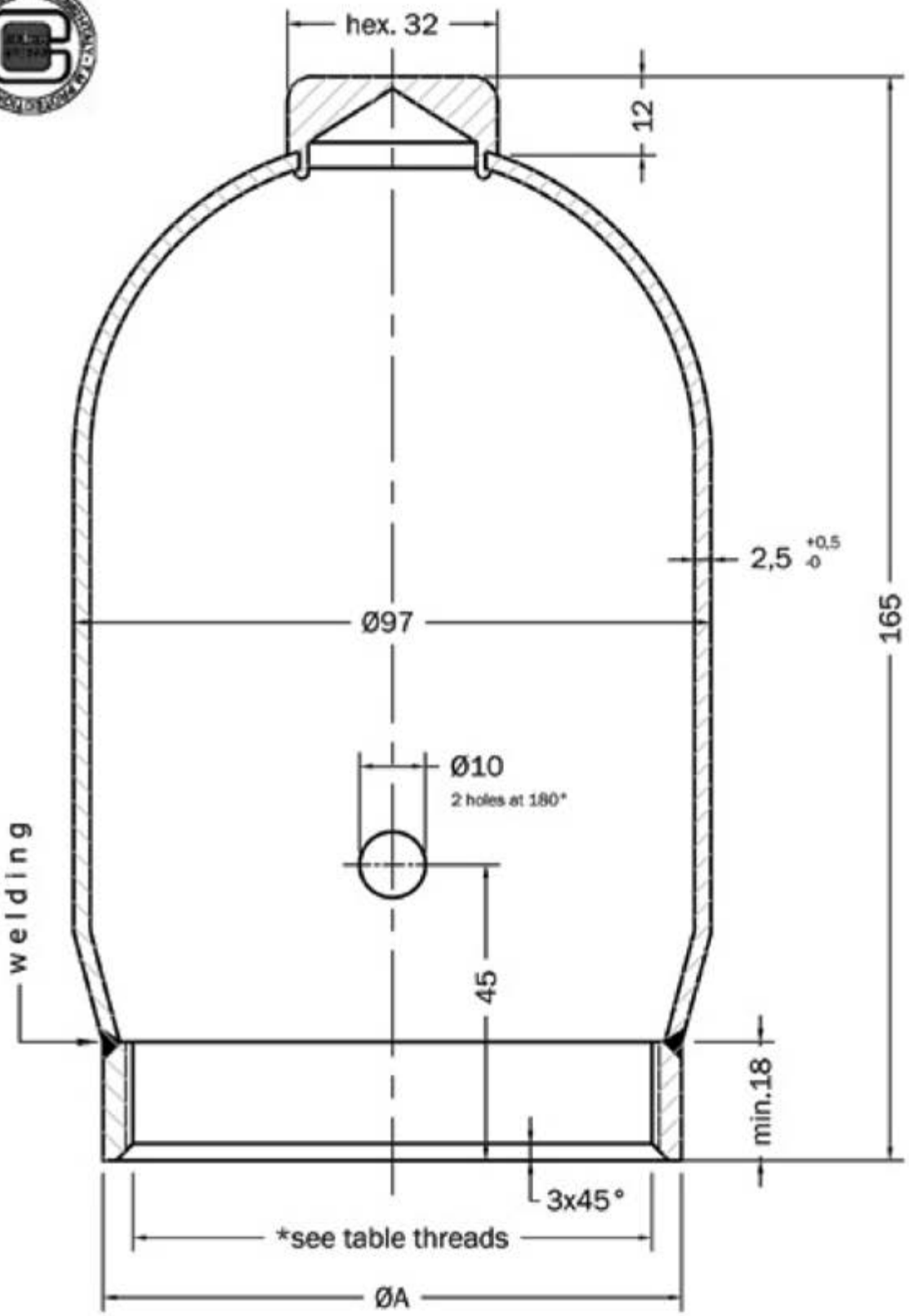

engraving
- BRIPAC
- ISO PA
- 140 Kg
- yy.zz

pos.	table threads	ØA
1.	W80x11T.P.I.	88
2.	3"1/8x11U.N.	88
...	on request	...

REV.	CAP EN ISO 11117	MATERIAL	STEEL

CUSTOMER	CUST.DWG.	MATERIAL	CHECKED	T. B.
LIMITS OF ACCURANCY			DRAWN	S. B.
UNLESS OTHERWISE SPECIFIED:			DATE	17-10-2012
TOLERANCES: decimals ± 2mm angles ± 5°			SCALE	1:1
			dwg.no.	1.09

bripac
Cavaria (VA) Italy • www.bripac.it • info@bripac.it

Information and data set farth here are disclosed in confidence and are proprietary and property of bripac srl and shall not, without its prior written permission, be used, duplicated or disclosed in whole or in part for any purpose other than authorized official business of bripac srl.

Steel Cap
dwg.I.09-I

Standards ISO 11117:2008
for cylinders up to 140 kg.

engraving
- **bripac**
- **ISO PA**
- **140 kg.**
- **yy.zz**

engraving
- **LOGO**

thread
- **W80x11T.P.I.**

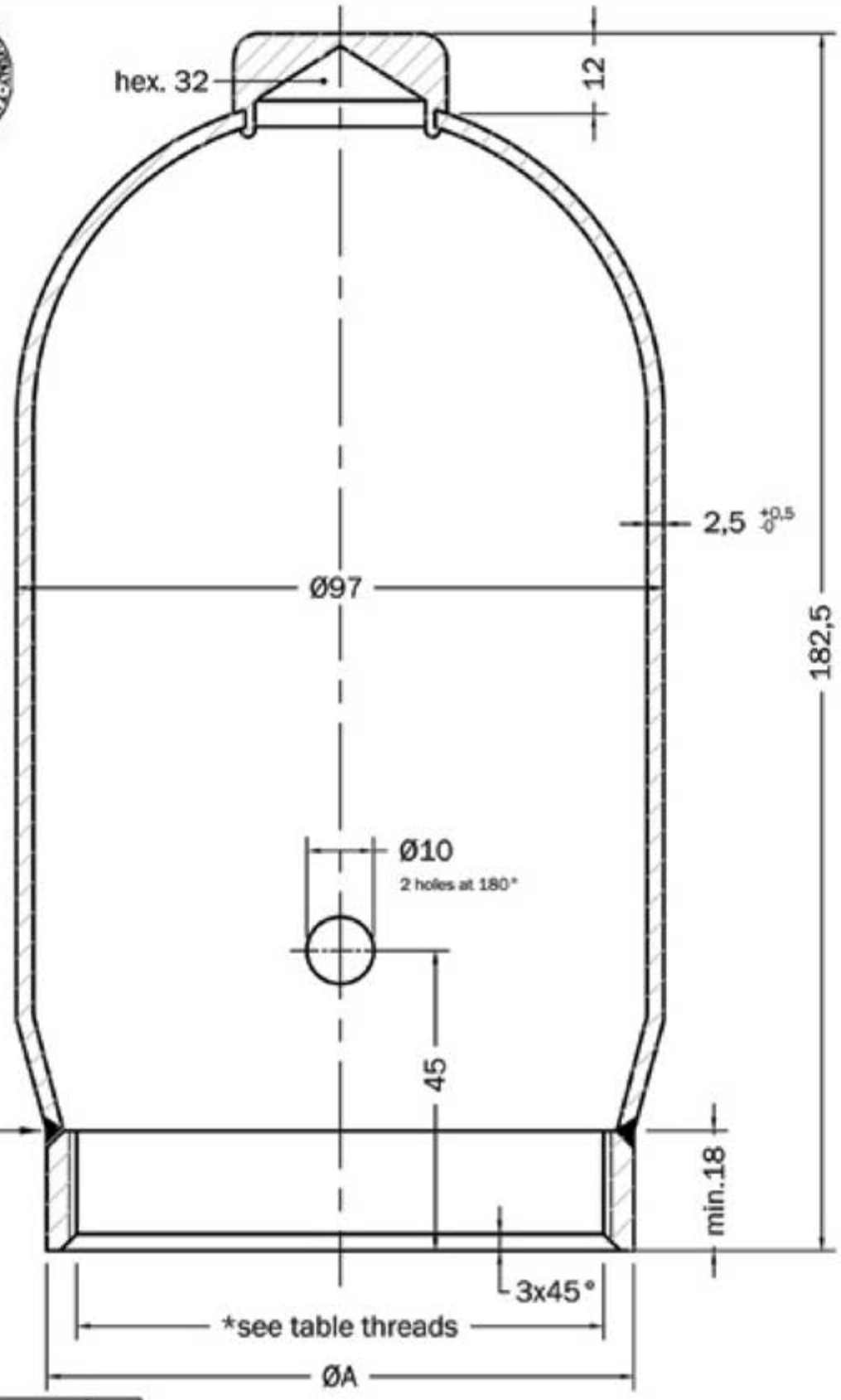

engraving
- BRIPAC
- ISO PA
- 140 Kg
- yy.zz

pos.	table threads	ØA
1.	W80x11T.P.I.	88
2.	3"1/8x11U.N.	88
...	on request	...

REV.	CAP EN ISO 11117	MATERIAL	STEEL

CUSTOMER

CUST.DWG.

MATERIAL

LIMITS OF ACCURANCY

UNLESS OTHERWISE SPECIFIED:

TOLERANCES:
decimals ± 2mm
angles ± 5°

bripac

Cavaria (VA) Italy • www.bripac.it • info@bripac.it

Information and data set farth here are disclosed in confidence and are proprietary and property of bripac srl and shall not, without its prior written permission, be used, duplicated or disclosed in whole or in part for any purpose other than authorized official business of bripac srl.

CHECKED	T. B.
DRAWN	S. B.
DATE	17-10-2012
SCALE	1:1
dwg.no.	1.09-1

Steel Guard
dwg.I.20

Standards ISO 11117:2008
for LPG cylinders up to 50 kg.

pad printing
1 or 2 sides
LOGO
and/or
instructions

thread
- **66x2,5S.I.**
- **68x3S.I.**

engraving
- BRIPAC
- ISO PB
- 50 Kg
- yy.zz

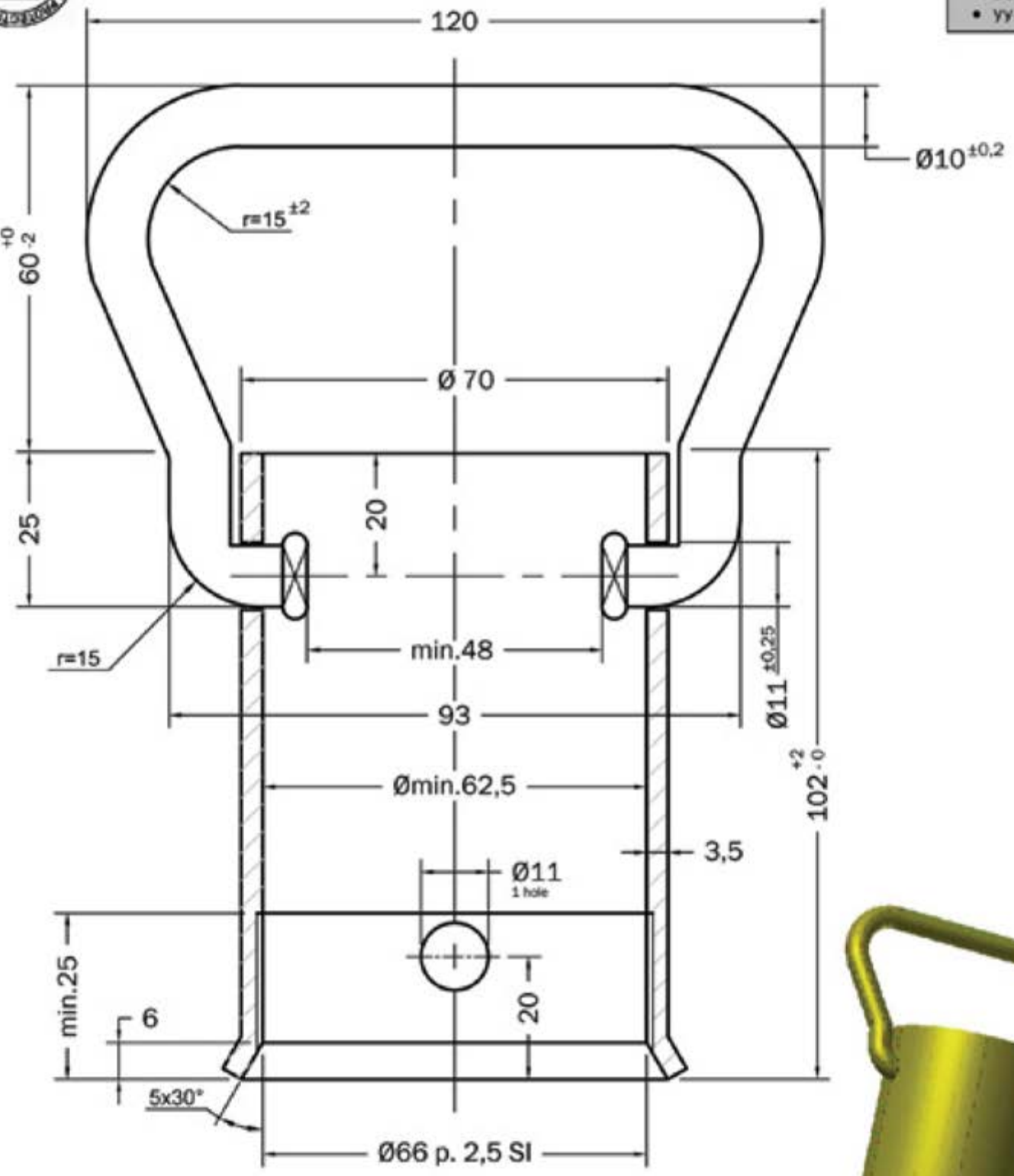

REV.	LPG GUARD	MATERIAL	STEEL

CUSTOMER	CUST.DWG.	MATERIAL	CHECKED	T. B.
LIMITS OF ACCURANCY			DRAWN	S. B.
UNLESS OTHERWISE SPECIFIED:			DATE	17-10-2012
TOLERANCES: decimals ± 2mm angles ± 5°			SCALE	1:1
			dwg.no.	1.20

bripac
Cavaria (VA) Italy • www.bripac.it • info@bripac.it

Information and data set farth here are disclosed in confidence and are proprietary and property of bripac srl and shall not, without its prior written permission, be used, duplicated or disclosed in whole or in part for any purpose other than authorized official business of bripac srl.

Steel Guard

dwg.I.30

Standards ISO 11117:2008

for cylinders up to 140 kg.

ring dia.14 mm

engraving
- **bripac**
- **ISO PA**
- **140 kg.**
- **yy.zz**

engraving
- **LOGO**

thread
- **W80x11T.P.I.**
- **3”1/8x11U.N.**
- **3”1/2x11U.N.**

engraving
- BRIPAC
- ISO PA
- 140 Kg
- yy.zz

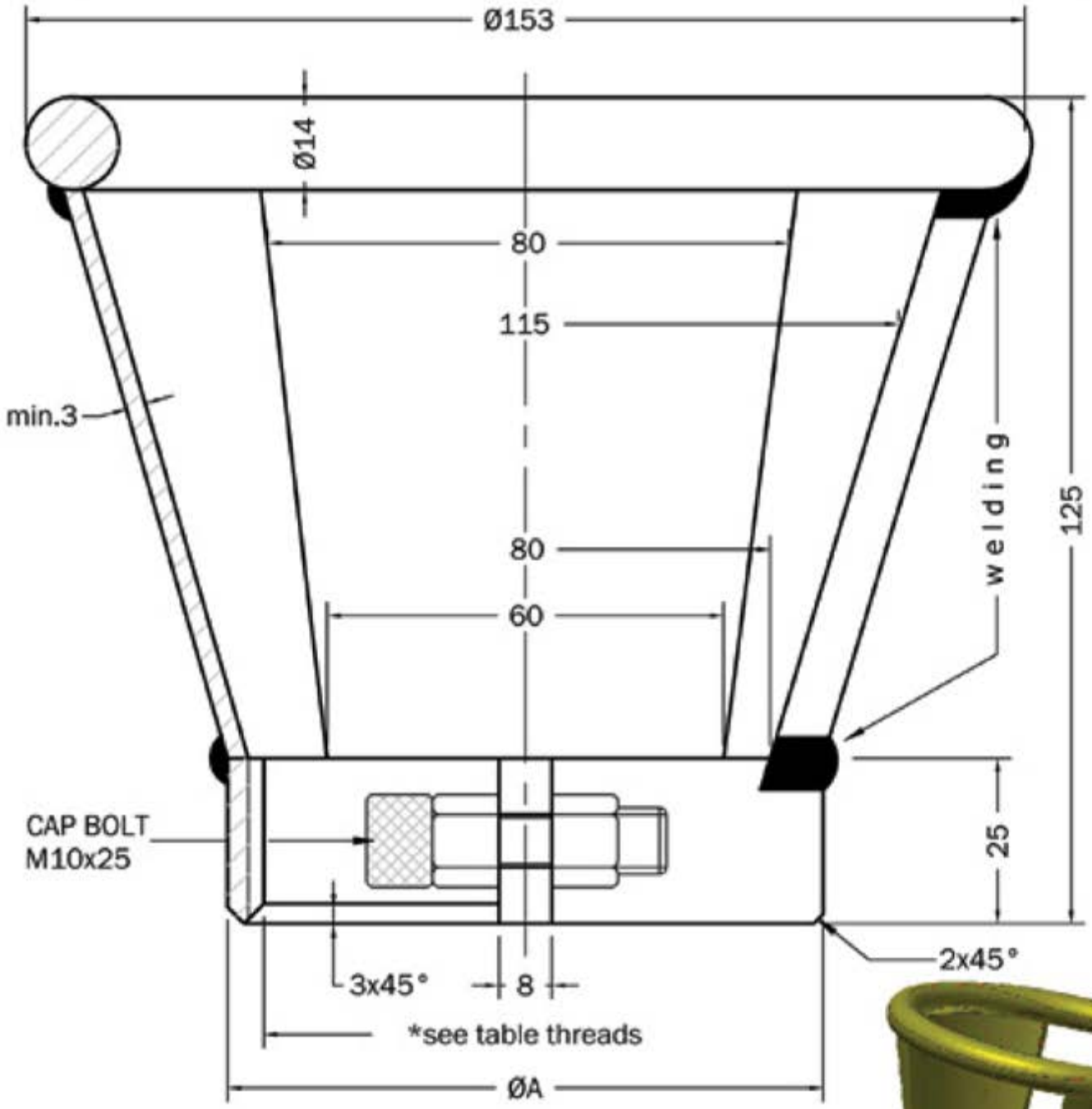

pos.	table threads	ØA
1.	W80x11T.P.I.	90
2.	3"1/8x11T.P.I.	90
3.	3"1/2x11T.P.I.	95
...	on request	...

REV.	GUARD EN ISO 11117	MATERIAL	STEEL
CUSTOMER	CUST.DWG.	MATERIAL	CHECKED: T. B.
LIMITS OF ACCURANCY			DRAWN: S. B.
UNLESS OTHERWISE SPECIFIED:			DATE: 17-10-2012
TOLERANCES: decimals ± 2mm angles ± 5°			SCALE: 1:1
			dwg.no. 1.30

bripac
Cavaria (VA) Italy • www.bripac.it • info@bripac.it

Information and data set farth here are disclosed in confidence and are proprietary and property of bripac srl and shall not, without its prior written permission, be used, duplicated or disclosed in whole or in part for any purpose other than authorized official business of bripac srl.

Steel Guard

dwg.I.30-a

Standards ISO 11117:2008

for all type of cylinders

ring dia.14 mm

engraving
- **bripac**
- **yy.zz**

engraving
- **LOGO**

thread
- **W80x11T.P.I.**
- **3”1/8x11U.N.**
- **3”1/2x11U.N.**

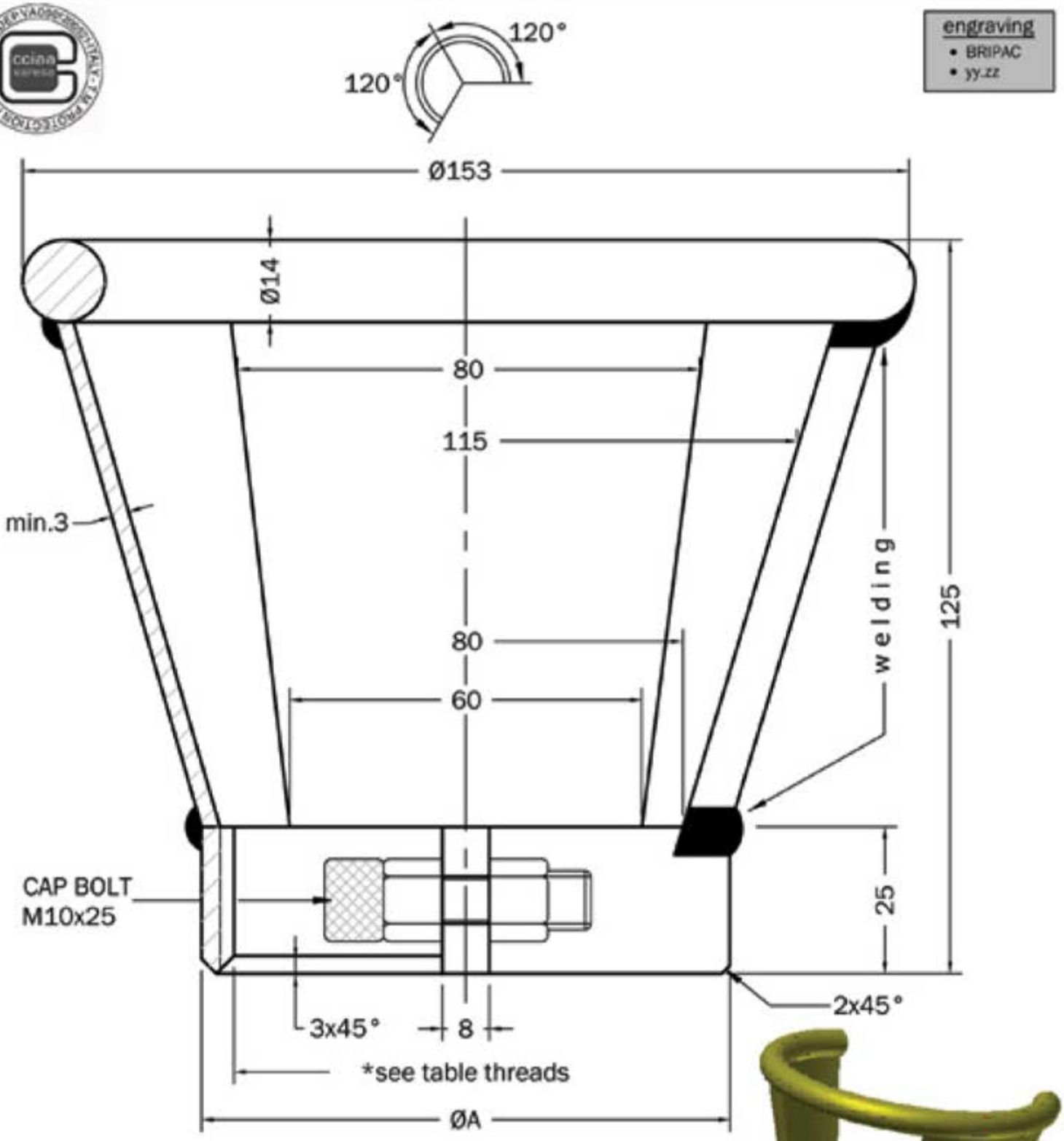

pos.	table threads	ØA
1.	W80x11T.P.I.	90
2.	3"1/8x11T.P.I.	90
3.	3"1/2x11T.P.I.	95
...	on request	...

REV.	GUARD	MATERIAL	STEEL
CUSTOMER	CUST.DWG.	MATERIAL	CHECKED: T. B.
LIMITS OF ACCURANCY			DRAWN: S. B.
UNLESS OTHERWISE SPECIFIED:			DATE: 17-10-2012
TOLERANCES: decimals ± 2mm angles ± 5°			SCALE: 1:1

bripac
Cavaria (VA) Italy • www.bripac.it • info@bripac.it

Information and data set farth here are disclosed in confidence and are proprietary and property of bripac srl and shall not, without its prior written permission, be used, duplicated or disclosed in whole or in part for any purpose other than authorized official business of bripac srl.

dwg.no. **1.30-a**

Steel Guard

dwg.I.33

Standards ISO 11117:2008

for cylinders up to 140 kg.

ring dia.14 mm

engraving
- **bripac**
- **ISO PA**
- **140 kg.**
- **yy.zz**

engraving
- **LOGO**

thread
- **W80x11T.P.I.**
- **3”1/8x11U.N.**
- **3”1/2x11U.N.**

engraving
- BRIPAC
- ISO PA
- 140 Kg
- yy.zz

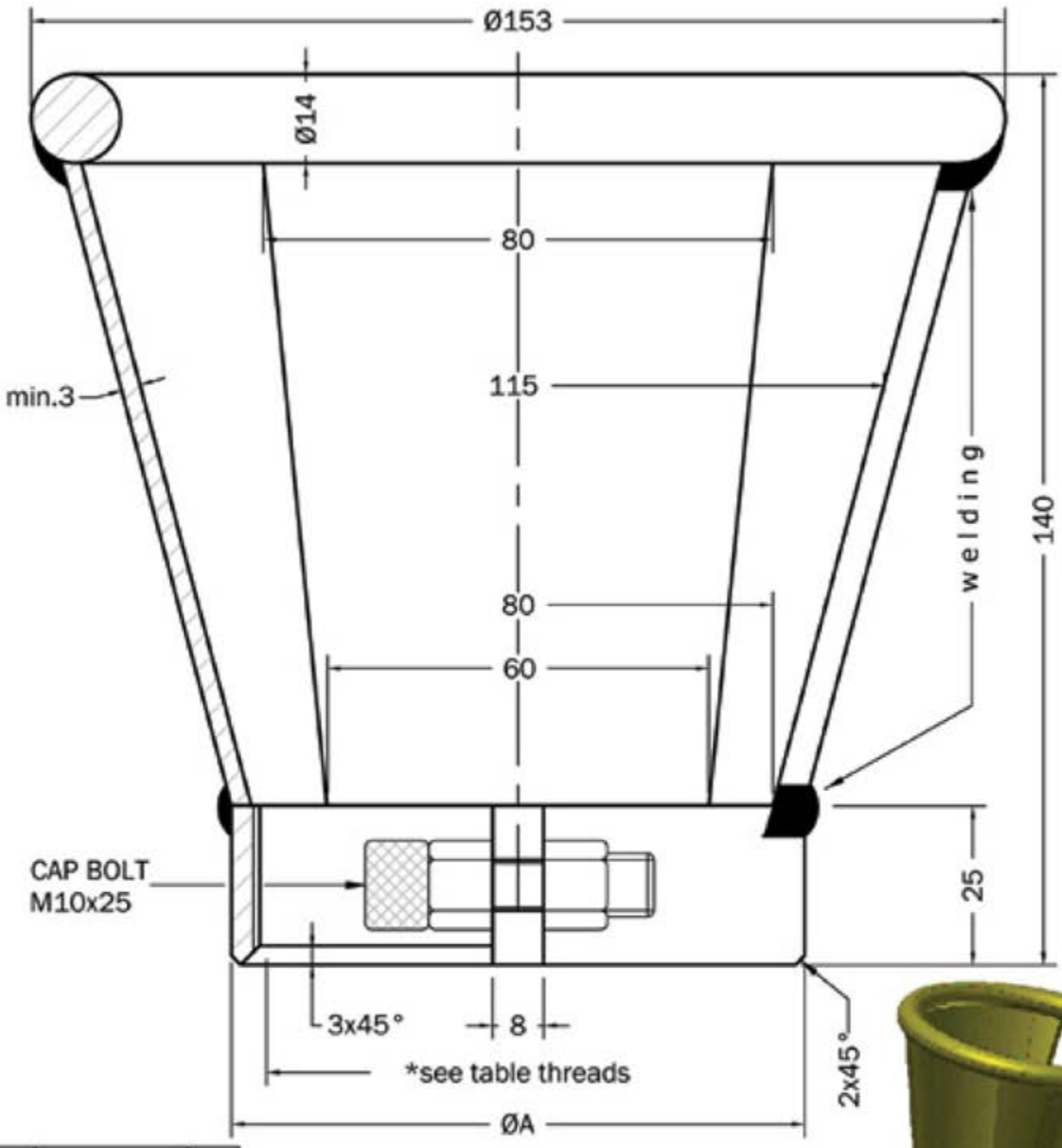

pos.	table threads	ØA
1.	W80x11T.P.I.	90
2.	3"1/8x11T.P.I.	90
3.	3"1/2x11T.P.I.	95
...	on request	...

REV.	GUARD EN ISO 11117	MATERIAL	STEEL
CUSTOMER	CUST.DWG.	MATERIAL	CHECKED: T. B.
LIMITS OF ACCURANCY			DRAWN: S. B.
UNLESS OTHERWISE SPECIFIED: TOLERANCES: decimals ± 2mm, angles ± 5°	bripac		DATE: 17-10-2012
	Cavaria (VA) Italy • www.bripac.it • info@bripac.it		SCALE: 1:1
			dwg.no. 1.33

Information and data set farth here are disclosed in confidence and are proprietary and property of bripac srl and shall not, without its prior written permission, be used, duplicated or disclosed in whole or in part for any purpose other than authorized official business of bripac srl.

Steel Guard
dwg.I.33-a

Standards ISO 11117:2008
for all type of cylinders

ring dia.14 mm

engraving
- **bripac**
- **yy.zz**

engraving
- **LOGO**

thread
- **W80x11T.P.I.**
- **3”1/8x11U.N.**
- **3”1/2x11U.N.**

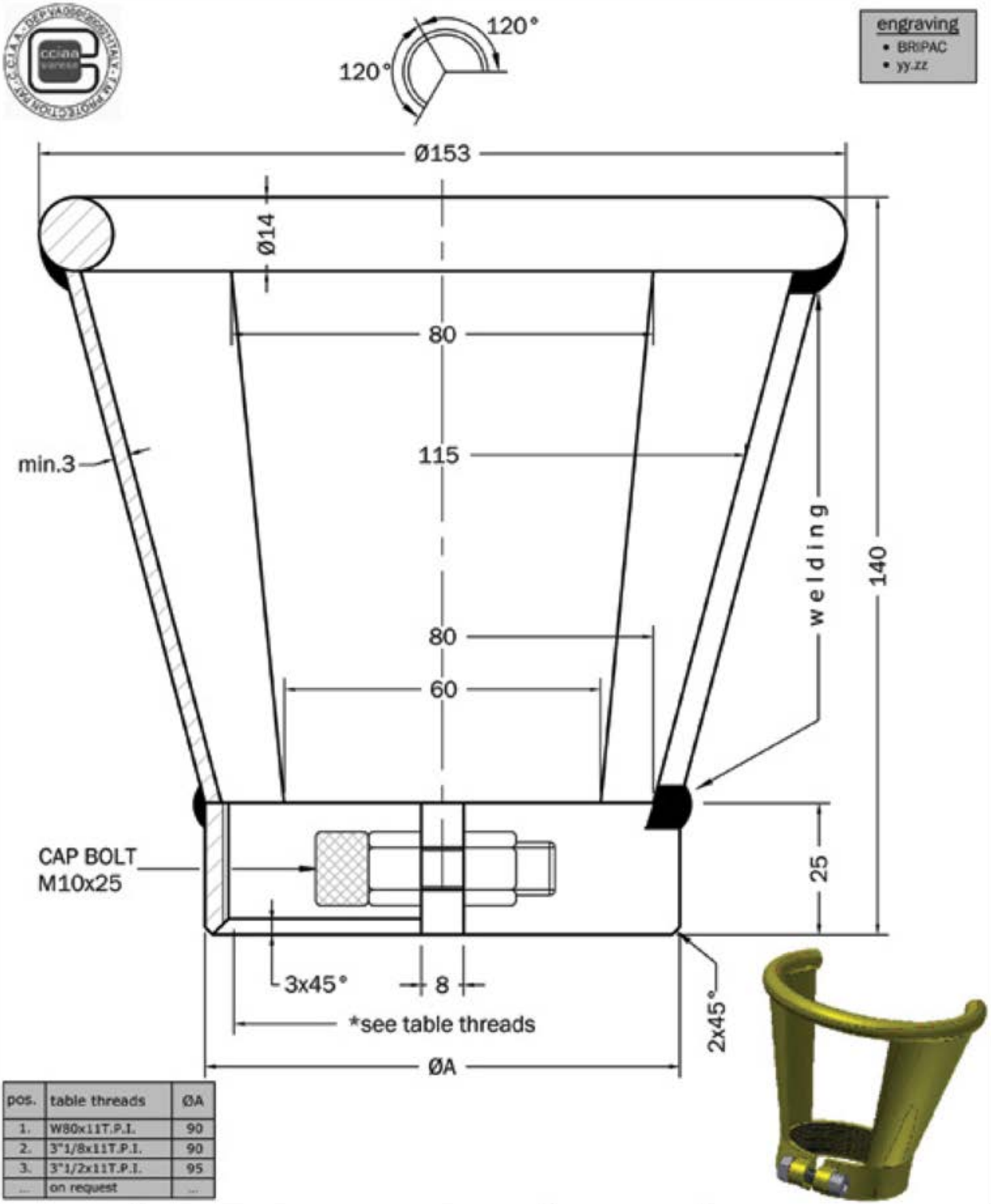

pos.	table threads	ØA
1.	W80x11T.P.I.	90
2.	3"1/8x11T.P.I.	90
3.	3"1/2x11T.P.I.	95
...	on request	...

REV.	GUARD EN ISO 11117	MATERIAL	STEEL
CUSTOMER	CUST.DWG.	MATERIAL	CHECKED: T. B.
LIMITS OF ACCURANCY			DRAWN: S. B.
UNLESS OTHERWISE SPECIFIED:			DATE: 17-10-2012
TOLERANCES: decimals ± 2mm, angles ± 5°	bripac		SCALE: 1:1
	Cavaria (VA) Italy • www.bripac.it • info@bripac.it		dwg.no. 1.33-a

Information and data set farth here are disclosed in confidence and are proprietary and property of bripac srl and shall not, without its prior written permission, be used, duplicated or disclosed in whole or in part for any purpose other than authorized official business of bripac srl.

Steel Guard

dwg.l.35-a

Standards ISO 11117:2008

for cylinders up to 140 kg.

ring dia.16 mm

engraving

- **bripac**
- **ISO PA**
- **140 kg.**
- **yy.zz**

Screw inside the ring
for safety

thread

- **W80x11T.P.I.**
- **3”1/8x11U.N.**

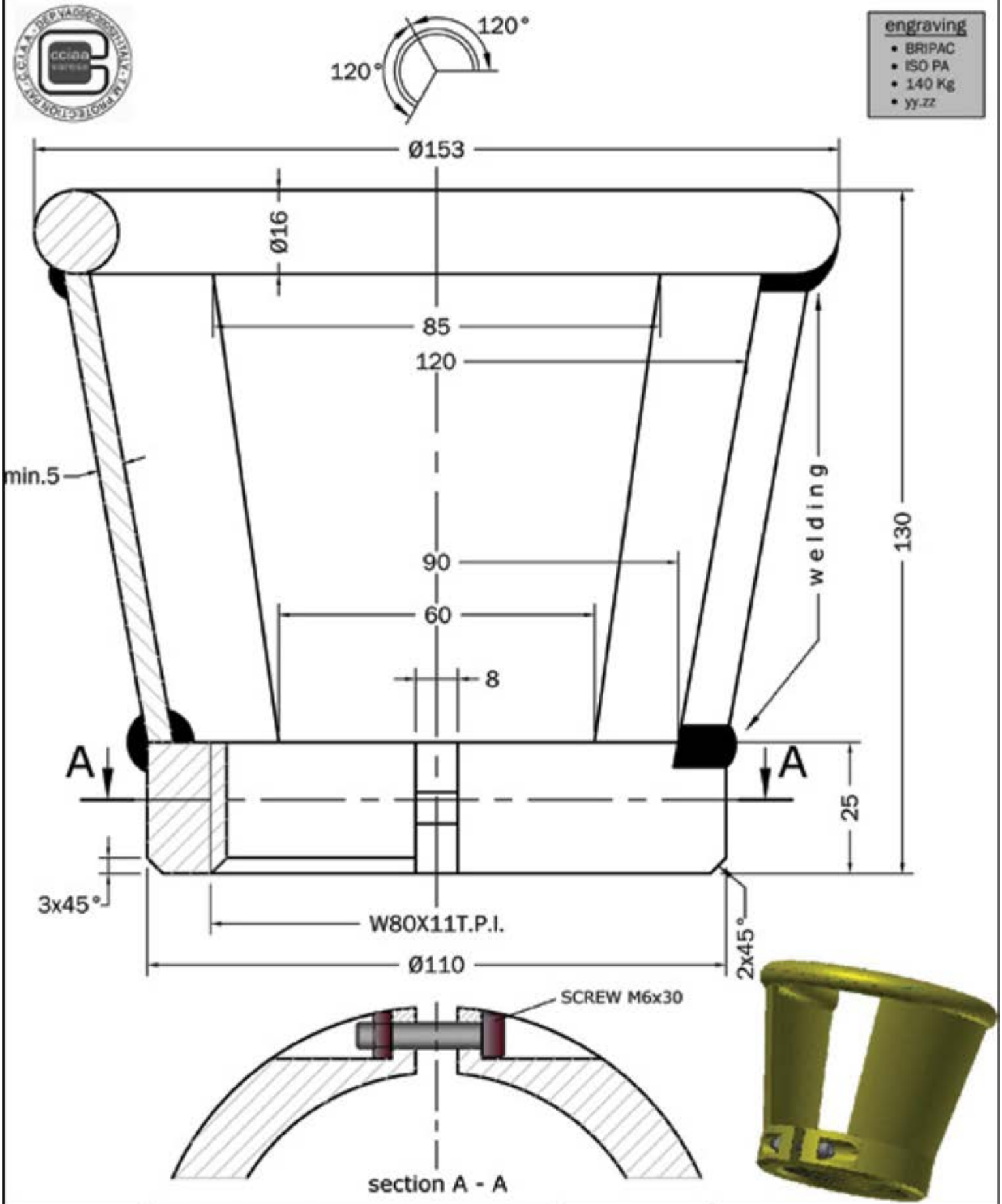

REV.	GUARD EN ISO 11117	MATERIAL	STEEL

CUSTOMER	CUST.DWG.	MATERIAL	CHECKED	T. B.
LIMITS OF ACCURANCY			DRAWN	S. B.
UNLESS OTHERWISE SPECIFIED:			DATE	17-10-2012
TOLERANCES: decimals ± 2mm angles ± 5°			SCALE	1:1
			dwg.no.	1.35-a

bripac
Cavaria (VA) Italy • www.bripac.it • info@bripac.it

Information and data set farth here are disclosed in confidence and are proprietary and property of bripac srl and shall not, without its prior written permission, be used, duplicated or disclosed in whole or in part for any purpose other than authorized official business of bripac srl.

Steel Guard
dwg.l.40-a

Standards ISO 11117:2008
for cylinders up to 140 kg.

grip

engraving
- **bripac**
- **ISO PA**
- **140 kg.**
- **yy.zz**

thread
- **W80x11T.P.I.**

Screw inside the ring for safety

engraving
- BRIPAC
- ISO PA
- 140 Kg
- yy.zz

Solution "A"

PVC knob

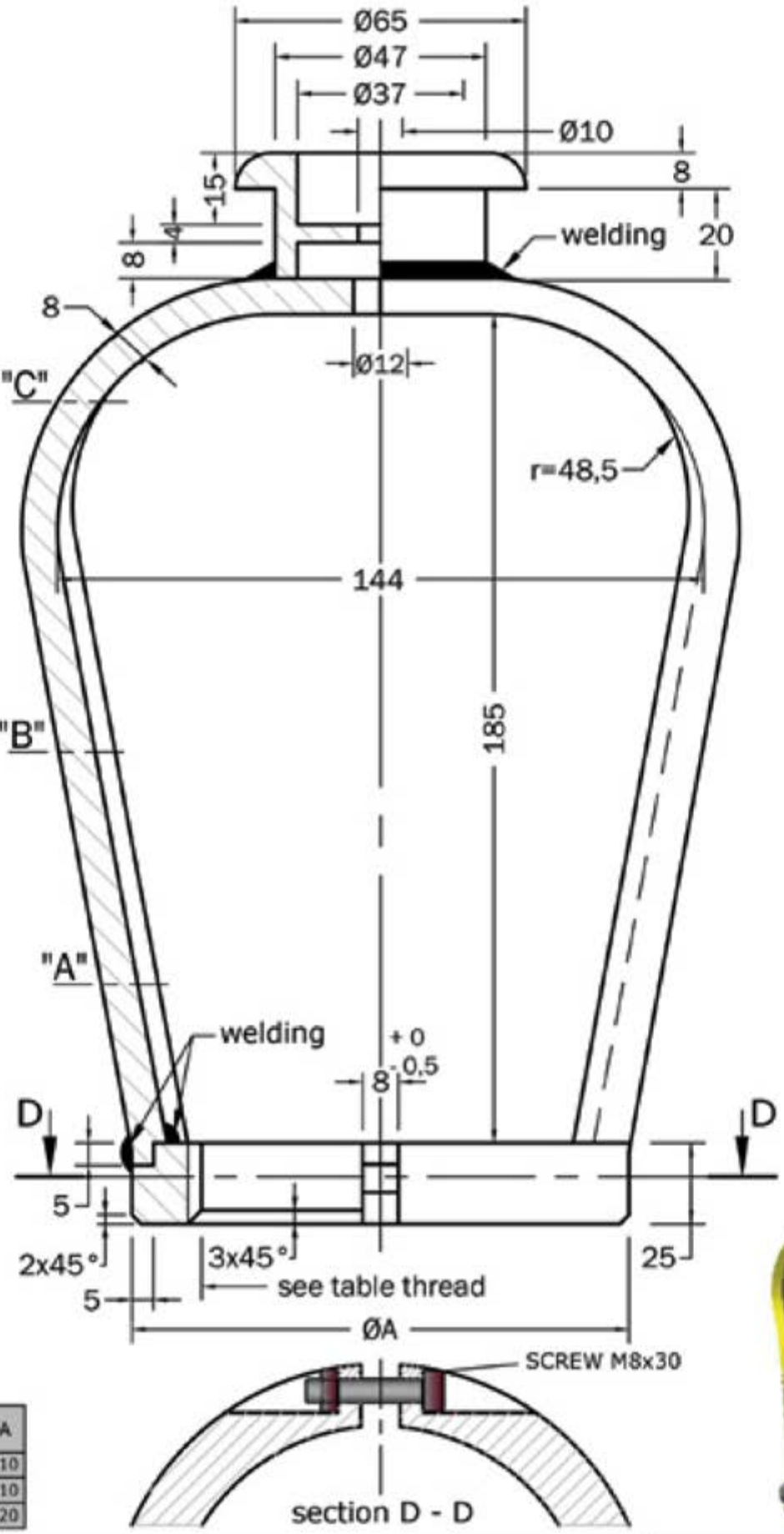

Details
scale 1:5

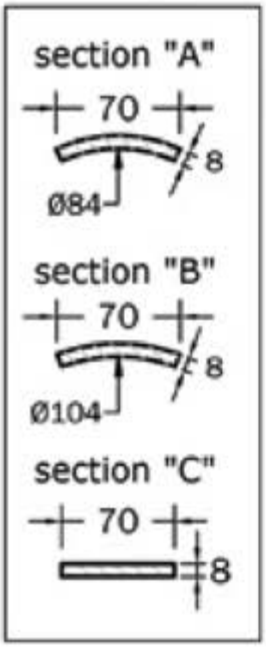

pos.	table threads	ØA
1.	W80x11T.P.I.	110
2.	3"1/8x11T.P.I.	110
3.	3"1/2x11T.P.I.	120

REV.	GUARD EN ISO 11117	MATERIAL	C40
CUSTOMER	CUST.DWG.	MATERIAL	CHECKED: T. B.
LIMITS OF ACCURANCY			DRAWN: S. B.
UNLESS OTHERWISE SPECIFIED: TOLERANCES: decimals ± 2mm angles ± 5°	bripac		DATE: 12-11-2013
	Cavaria (VA) Italy • www.bripac.it • info@bripac.it		SCALE: 1:1,5
	Information and data set farth here are disclosed in confidence and are proprietary and property of bripac srl and shall not, without its prior written permission, be used, duplicated or disclosed in whole or in part for any purpose other than authorized official business of bripac srl.		dwg.no. 1.40-a

Steel Guard

dwg.I.42

Standards ISO 11117:2008

for cylinders up to 140 kg.

grip

engraving
- **bripac**
- **ISO PA**
- **140 kg.**
- **yy.zz**

space for chip

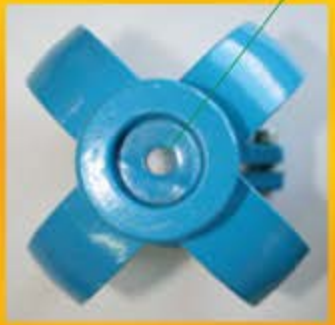

thread
- **W80x11T.P.I.**

engraving
- BRIPAC
- ISO PA
- 140 Kg
- yy.zz

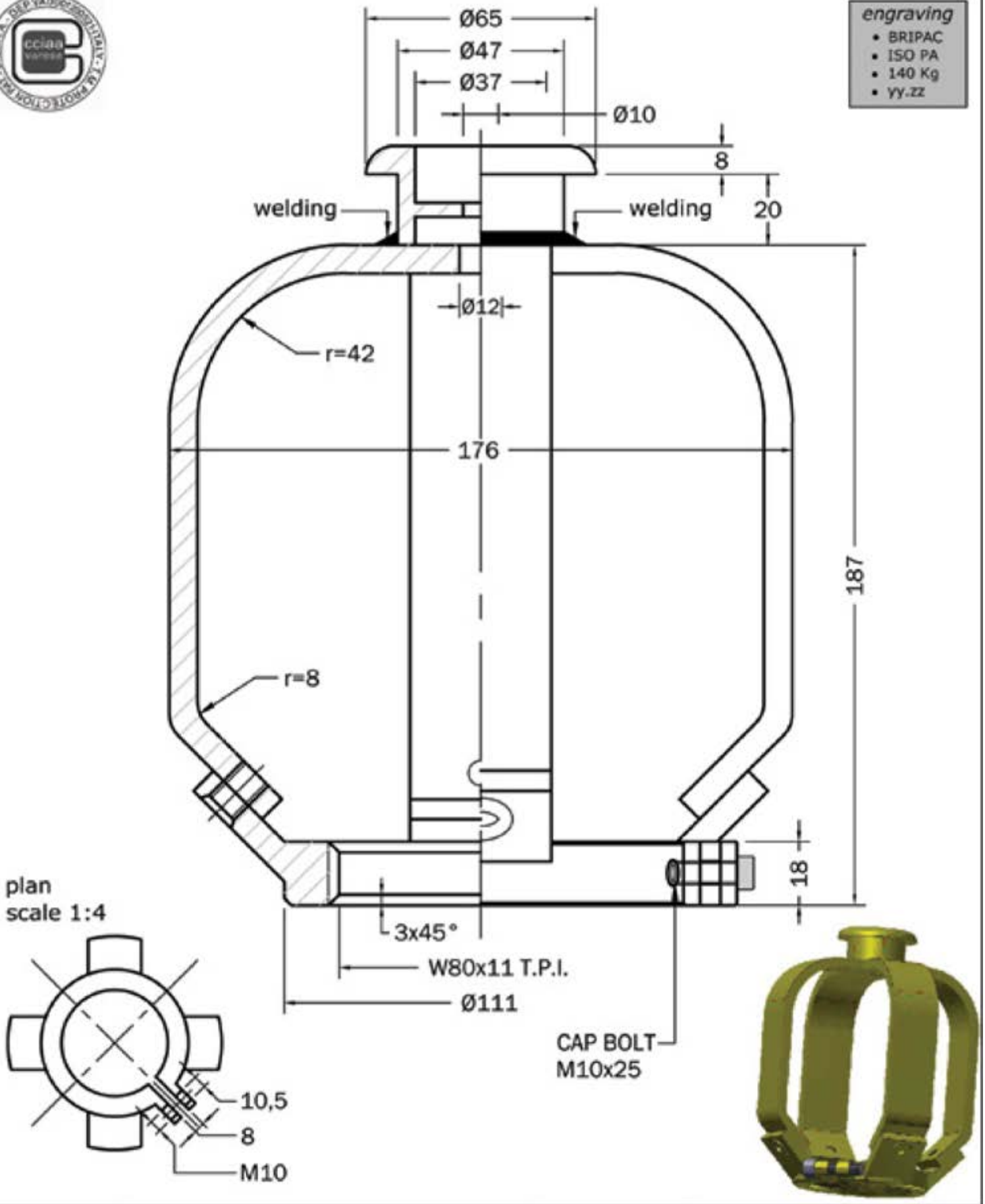

plan
scale 1:4

REV.	GUARD EN ISO 11117	MATERIAL	C40

CUSTOMER	CUST.DWG.	MATERIAL	CHECKED	T. B.
LIMITS OF ACCURANCY			DRAWN	S. B.
UNLESS OTHERWISE SPECIFIED:			DATE	17-10-2012
TOLERANCES: decimals ± 2mm angles ± 5°			SCALE	1:1,5
			dwg.no.	1.42

bripac
Cavaria (VA) Italy • www.bripac.it • info@bripac.it

Information and data set farth here are disclosed in confidence and are proprietary and property of bripac srl and shall not, without its prior written permission, be used, duplicated or disclosed in whole or in part for any purpose other than authorized official business of bripac srl.

ABS & Nylon Guard

dwg.BB.01

Standards ISO 11117:2008

for cylinders up to 30 kg.

50 kg.

news 80 kg.

pad printing

1 or 2 sides
LOGO and/or
Instructions

liabel

thread

- **W80x11T.P.I.**
- **3”1/8x11U.N.**

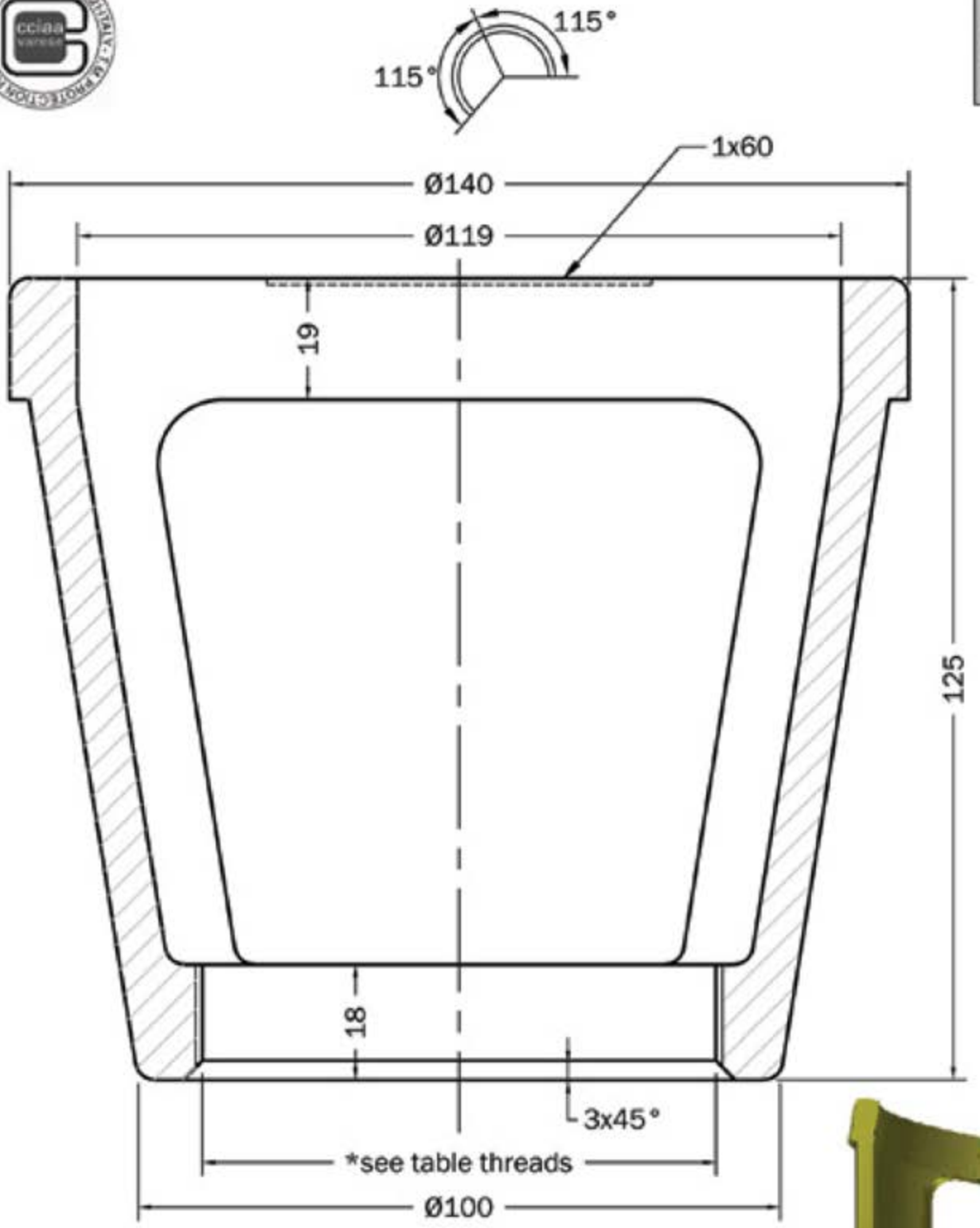

engraving
- BRIPAC
- ISO PA
- 30 - 50 - 80 Kg
- yy.zz

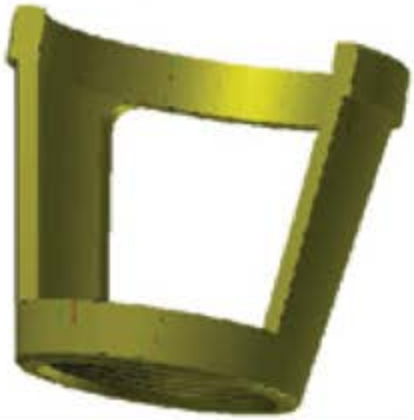

pos.	table threads
1.	W80x11T.P.I.
...	on request

REV.	GUARD EN ISO 11117	MATERIAL	ABS / NYLON

CUSTOMER	CUST.DWG.	MATERIAL	CHECKED	T. B.
LIMITS OF ACCURANCY	bripac		DRAWN	S. B.
UNLESS OTHERWISE SPECIFIED:			DATE	17-10-2012
TOLERANCES: decimals ± 2mm angles ± 5°	Cavaria (VA) Italy • www.bripac.it • info@bripac.it		SCALE	1:1
	Information and data set farth here are disclosed in confidence and are proprietary and property of bripac srl and shall not, without its prior written permission, be used, duplicated or disclosed in whole or in part for any purpose other than authorized official business of bripac srl.		dwg.no.	BB.01

Steel Guard
dwg.BB.03-I

Standards ISO 11117:2008
for cylinders up to 140 kg.

engraving
- **bripac**
- **ISO PA**
- **140 kg.**
- **yy.zz**

engraving
- **LOGO**

thread
- **W80x11T.P.I.**
- **3”1/8x11U.N.**

engraving
- BRIPAC
- ISO PA
- 140 Kg
- yy.zz

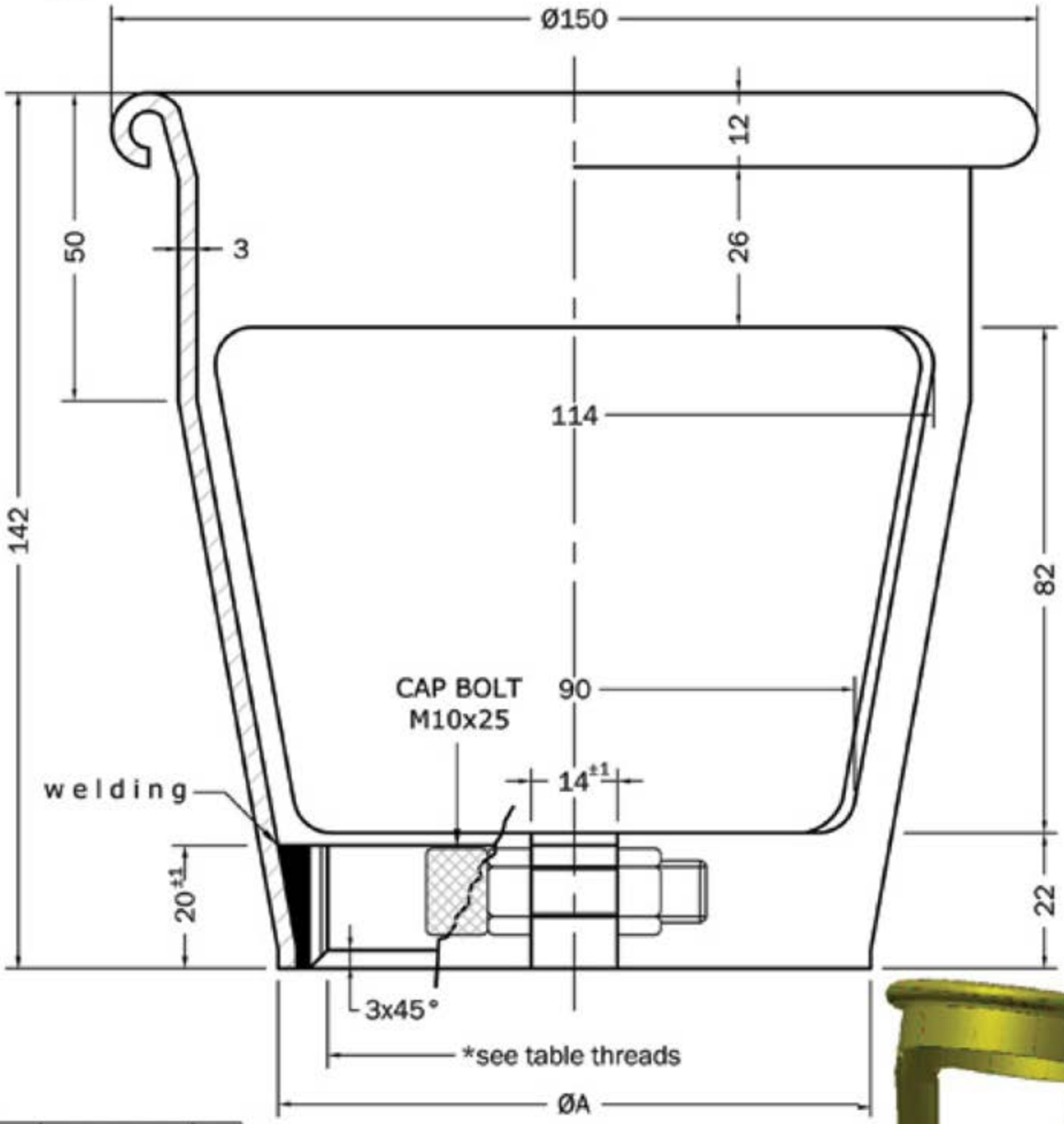

pos.	table threads	ØA
1.	W80x11T.P.I.	96
...	on request	...
threads checked after zinc or painting		

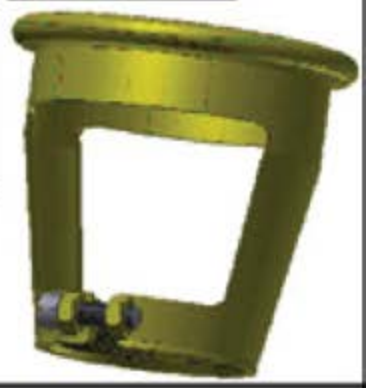

REV.	GUARD EN ISO 11117	MATERIAL	STEEL
CUSTOMER	CUST.DWG.	MATERIAL	CHECKED: T. B.
LIMITS OF ACCURANCY			DRAWN: S. B.
UNLESS OTHERWISE SPECIFIED:			DATE: 17-10-2012
TOLERANCES: decimals ± 2,5mm angles ± 5°			SCALE: 1:1

bripac
Cavaria (VA) Italy • www.bripac.it • info@bripac.it

Information and data set farth here are disclosed in confidence and are proprietary and property of bripac srl and shall not, without its prior written permission, be used, duplicated or disclosed in whole or in part for any purpose other than authorized official business of bripac srl.

dwg.no. **BB.03-1**

ABS & Nylon Guard

dwg.BB.04

Standards ISO 11117:2008

for LPG cylinders up to 50 kg.

pad printing
1 or 2 sides
LOGO and/or
Instructions

liabel

thread
- **66x2,5 S.I.**
- **68x3 S.I.**

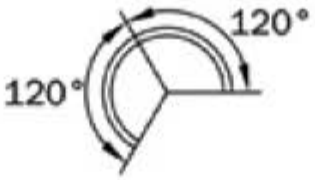

engraving
- BRIPAC
- ISO PB
- 35 - 50 Kg
- yy.zz

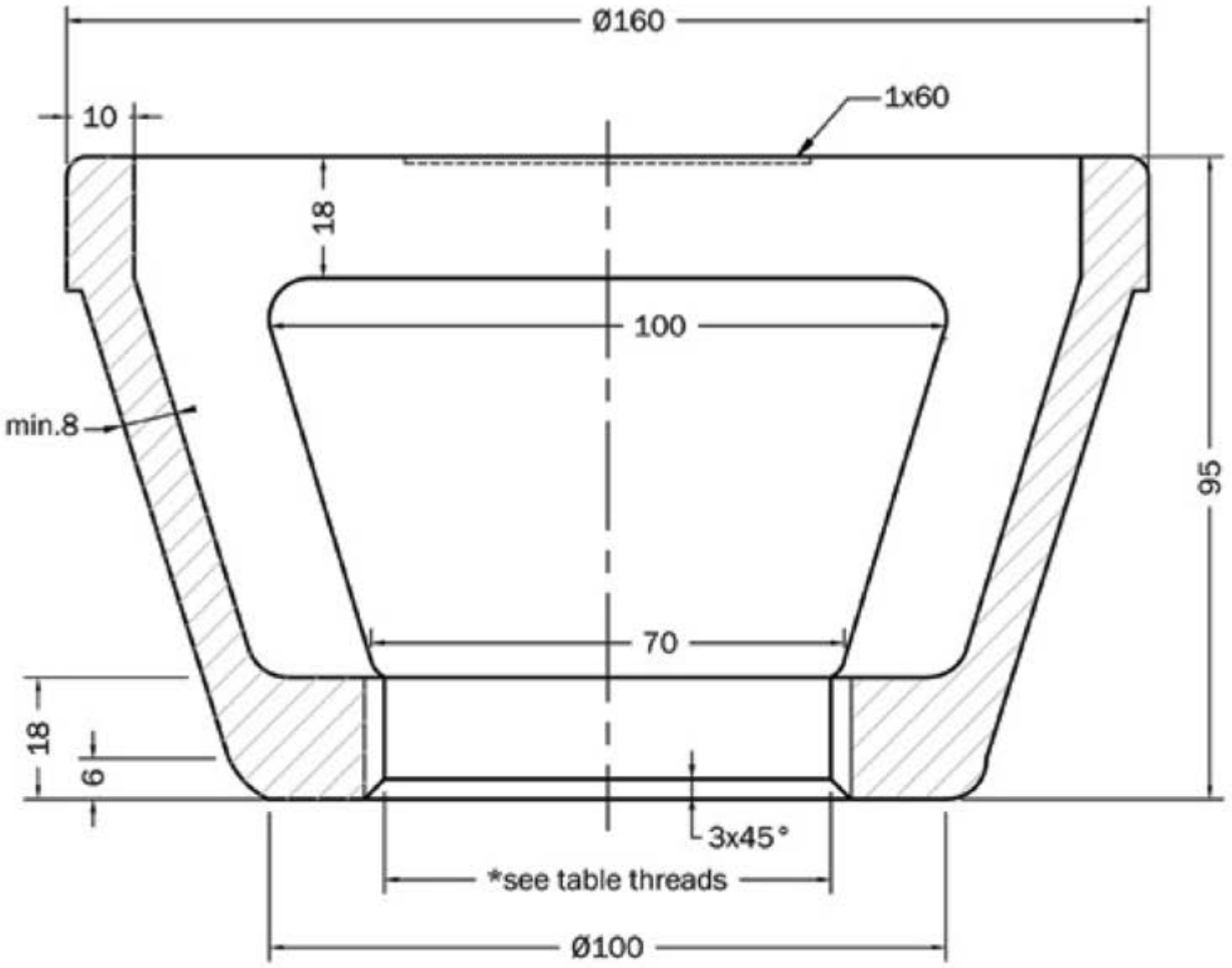

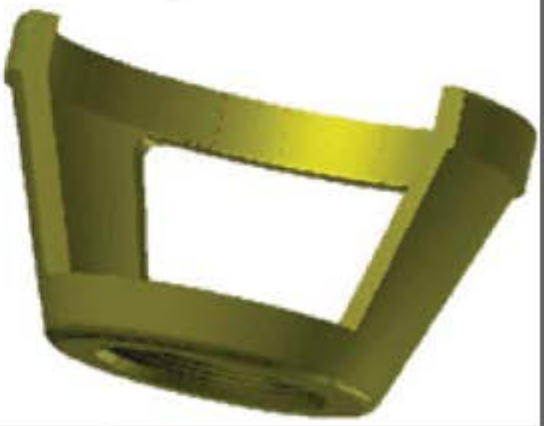

pos.	table threads
1.	66x2,5 S.I.
2.	68x3 S.I.
...	on request

REV.	LPG GUARD	MATERIAL	ABS / NYLON

CUSTOMER	CUST.DWG.	MATERIAL	CHECKED	T. B.
LIMITS OF ACCURANCY	bripac		DRAWN	S. B.
UNLESS OTHERWISE SPECIFIED:			DATE	17-10-2012
TOLERANCES: decimals ± 2mm angles ± 5°	Cavaria (VA) Italy • www.bripac.it • info@bripac.it		SCALE	1:1
	Information and data set farth here are disclosed in confidence and are proprietary and property of bripac srl and shall not, without its prior written permission, be used, duplicated or disclosed in whole or in part for any purpose other than authorized official business of bripac srl.		dwg.no.	BB.04

2017

JANUARY

wk	Mo	Tu	We	Th	Fr	Sa	Su
52							1
1	2	3	4	5	6	7	8
2	9	10	11	12	13	14	15
3	16	17	18	19	20	21	22
4	23	24	25	26	27	28	29
5	30	31					

FEBRUARY

wk	Mo	Tu	We	Th	Fr	Sa	Su
5			1	2	3	4	5
6	6	7	8	9	10	11	12
7	13	14	15	16	17	18	19
8	20	21	22	23	24	25	26
9	27	28					

MARCH

wk	Mo	Tu	We	Th	Fr	Sa	Su
9			1	2	3	4	5
10	6	7	8	9	10	11	12
11	13	14	15	16	17	18	19
12	20	21	22	23	24	25	26
13	27	28	29	30	31		

APRIL

wk	Mo	Tu	We	Th	Fr	Sa	Su
13						1	2
14	3	4	5	6	7	8	9
15	10	11	12	13	14	15	16
16	17	18	19	20	21	22	23
17	24	25	26	27	28	29	30

MAY

wk	Mo	Tu	We	Th	Fr	Sa	Su
18	1	2	3	4	5	6	7
19	8	9	10	11	12	13	14
20	15	16	17	18	19	20	21
21	22	23	24	25	26	27	28
22	29	30	31				

JUNE

wk	Mo	Tu	We	Th	Fr	Sa	Su
22				1	2	3	4
23	5	6	7	8	9	10	11
24	12	13	14	15	16	17	18
25	19	20	21	22	23	24	25
26	26	27	28	29	30		

JULY

wk	Mo	Tu	We	Th	Fr	Sa	Su
26						1	2
27	3	4	5	6	7	8	9
28	10	11	12	13	14	15	16
29	17	18	19	20	21	22	23
30	24	25	26	27	28	29	30
31	31						

AUGUST

wk	Mo	Tu	We	Th	Fr	Sa	Su
31		1	2	3	4	5	6
32	7	8	9	10	11	12	13
33	14	15	16	17	18	19	20
34	21	22	23	24	25	26	27
35	28	29	30	31			

SEPTEMBER

wk	Mo	Tu	We	Th	Fr	Sa	Su
35					1	2	3
36	4	5	6	7	8	9	10
37	11	12	13	14	15	16	17
38	18	19	20	21	22	23	24
39	25	26	27	28	29	30	

OCTOBER

wk	Mo	Tu	We	Th	Fr	Sa	Su
39							1
40	2	3	4	5	6	7	8
41	9	10	11	12	13	14	15
42	16	17	18	19	20	21	22
43	23	24	25	26	27	28	29
44	30	31					

NOVEMBER

wk	Mo	Tu	We	Th	Fr	Sa	Su
44			1	2	3	4	5
45	6	7	8	9	10	11	12
46	13	14	15	16	17	18	19
47	20	21	22	23	24	25	26
48	27	28	29	30			

DECEMBER

wk	Mo	Tu	We	Th	Fr	Sa	Su
48					1	2	3
49	4	5	6	7	8	9	10
50	11	12	13	14	15	16	17
51	18	19	20	21	22	23	24
52	25	26	27	28	29	30	31

2018

JANUARY

wk	Mo	Tu	We	Th	Fr	Sa	Su
1	1	2	3	4	5	6	7
2	8	9	10	11	12	13	14
3	15	16	17	18	19	20	21
4	22	23	24	25	26	27	28
5	29	30	31				

FEBRUARY

wk	Mo	Tu	We	Th	Fr	Sa	Su
5				1	2	3	4
6	5	6	7	8	9	10	11
7	12	13	14	15	16	17	18
8	19	20	21	22	23	24	25
9	26	27	28				

MARCH

wk	Mo	Tu	We	Th	Fr	Sa	Su
9				1	2	3	4
10	5	6	7	8	9	10	11
11	12	13	14	15	16	17	18
12	19	20	21	22	23	24	25
13	26	27	28	29	30	31	

APRIL

wk	Mo	Tu	We	Th	Fr	Sa	Su
13							1
14	2	3	4	5	6	7	8
15	9	10	11	12	13	14	15
16	16	17	18	19	20	21	22
17	23	24	25	26	27	28	29
18	30						

MAY

wk	Mo	Tu	We	Th	Fr	Sa	Su
18		1	2	3	4	5	6
19	7	8	9	10	11	12	13
20	14	15	16	17	18	19	20
21	21	22	23	24	25	26	27
22	28	29	30	31			

JUNE

wk	Mo	Tu	We	Th	Fr	Sa	Su
22					1	2	3
23	4	5	6	7	8	9	10
24	11	12	13	14	15	16	17
25	18	19	20	21	22	23	24
26	25	26	27	28	29	30	

JULY

wk	Mo	Tu	We	Th	Fr	Sa	Su
26							1
27	2	3	4	5	6	7	8
28	9	10	11	12	13	14	15
29	16	17	18	19	20	21	22
30	23	24	25	26	27	28	29
31	30	31					

AUGUST

wk	Mo	Tu	We	Th	Fr	Sa	Su
31			1	2	3	4	5
32	6	7	8	9	10	11	12
33	13	14	15	16	17	18	19
34	20	21	22	23	24	25	26
35	27	28	29	30	31		

SEPTEMBER

wk	Mo	Tu	We	Th	Fr	Sa	Su
35						1	2
36	3	4	5	6	7	8	9
37	10	11	12	13	14	15	16
38	17	18	19	20	21	22	23
39	24	25	26	27	28	29	30

OCTOBER

wk	Mo	Tu	We	Th	Fr	Sa	Su
40	1	2	3	4	5	6	7
41	8	9	10	11	12	13	14
42	15	16	17	18	19	20	21
43	22	23	24	25	26	27	28
44	29	30	31				

NOVEMBER

wk	Mo	Tu	We	Th	Fr	Sa	Su
44				1	2	3	4
45	5	6	7	8	9	10	11
46	12	13	14	15	16	17	18
47	19	20	21	22	23	24	25
48	26	27	28	29	30		

DECEMBER

wk	Mo	Tu	We	Th	Fr	Sa	Su
48						1	2
49	3	4	5	6	7	8	9
50	10	11	12	13	14	15	16
51	17	18	19	20	21	22	23
52	24	25	26	27	28	29	30
1	31						

bripac®

our history

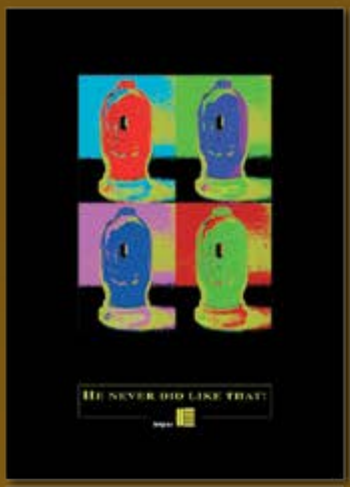
HE NEVER DID LIKE THAT!

TOGETHER • AGAIN • SIGHING • THE • FUTURE

bripac

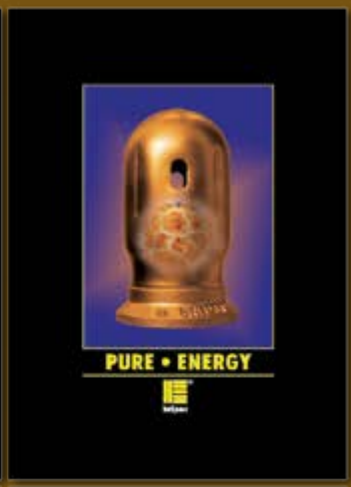
PURE • ENERGY

bripac
Y·E·S W·E C·A·N!

IMPORTANTS • & • SUPPORTING

KEEP • ON • RUNNING

FUTURE • NEEDS • OUR • HISTORY

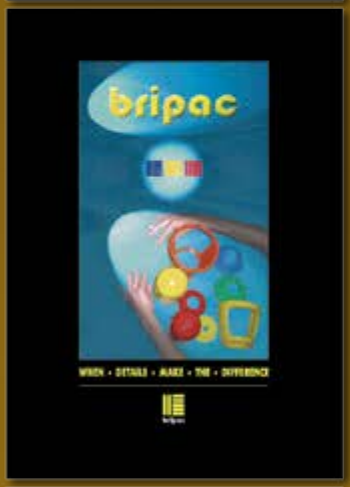
bripac

BRAND • THE • QUALITY

bripac
MORE • TO • COME

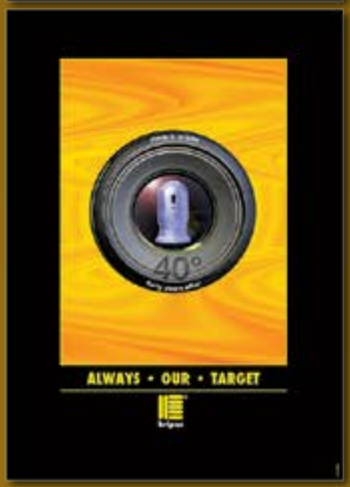
40°
ALWAYS • OUR • TARGET

bripac
QUALITY • & • SAFETY

QUALITY·PASSION·WORLDWIDE

·2017 EVOLUTION·

2017 Revolution

bripac

centro artigianale • p.le del lavoro, 205 • 21044 Cavaria (Va) • Italy
phone +39-0331-212333/216100 • fax +39-0331-219282
www.bripac.it • info@bripac.it